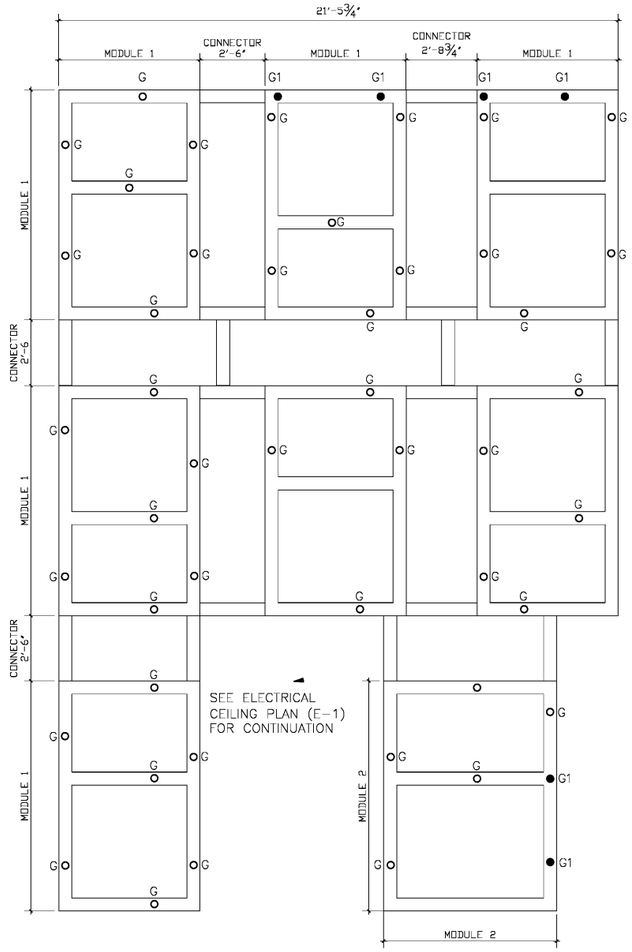

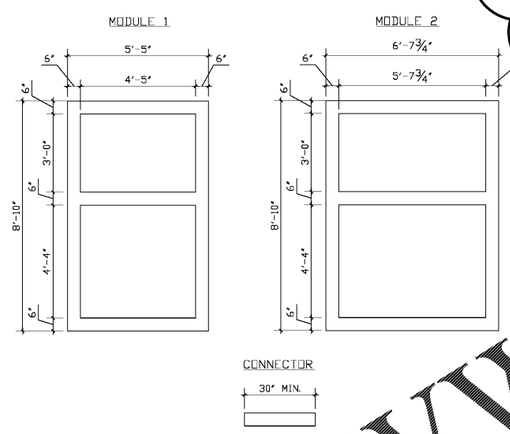

NOTES:
1. SUSPENDED TRELLIS 3D LAMINATE ON PVC BOARD. SURFEX OMNOVA SOLUTIONS ALMOND CHERRY 12 MIL.
2. GENERAL DIMENSIONS 6"x6" SUSPENDED FROM AN OPEN TRUSS CEILING
3. SUSPENDED SYSTEM: UNISTRUT ELEMENTS AND THREADED RODS
4. FIT UNISTRUT BETWEEN JOIST SYSTEM WITH SUFFICIENT EXCESS ALLOW FOR MOVEMENT DURING INSTALLATION. PROVIDE (2) 3/8-16 NUTS AND (2) WASHER (ID:0.375.OD 1.00)
5. NUMBER OF MODULES SHALL BE PER BUILDING CONDITION. ALL MODULES SHALL BE INTERCONNECTED.
6. ADJUST CONNECTION ELEMENTS DIMENSION PER BUILDING CONDITIONS.
7. LIGHT FIXTURES SHALL BE LOCATED AT THE MODULES, NOT THE CONNECTING ELEMENTS. CONCEALED LED LIGHTS PER BURGER KING LIGHTING STANDARDS. THE MINIMUM NUMBER OF CONCEALED TRELLIS LIGHT FIXTURES SHALL COMPLY WITH BUILDING CODES AND REGULATIONS. FOR LIGHT FIXTURE TYPES REFER TO LIGHT FIXTURE SCHEDULE FOUND ON DESIGNNWTHBK.COM (COMMON DOCUMENTS

4 TRELLIS DETAILS
SCALE: 3/8"=1'-0"

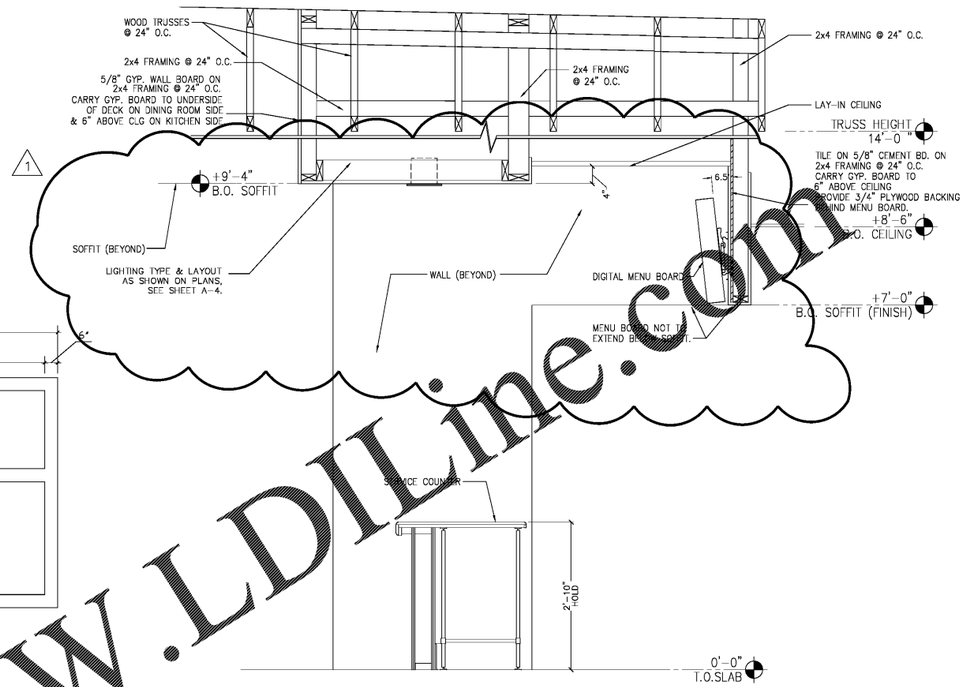

7 MENU BOARD HEADER & FRONT SERVICE COUNTER SOFFIT DETAIL
SCALE: 3/4"=1'-0"

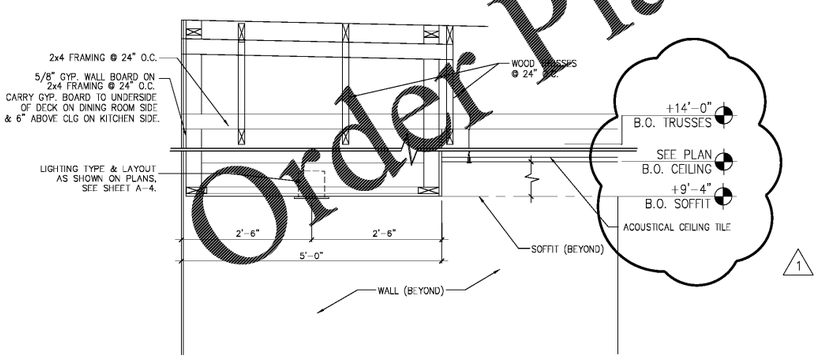

10 BEVERAGE STATION SOFFIT DETAIL
SCALE: 3/4"=1'-0"
SUSPENDED ACOUSTICAL CEILING CONDITION.

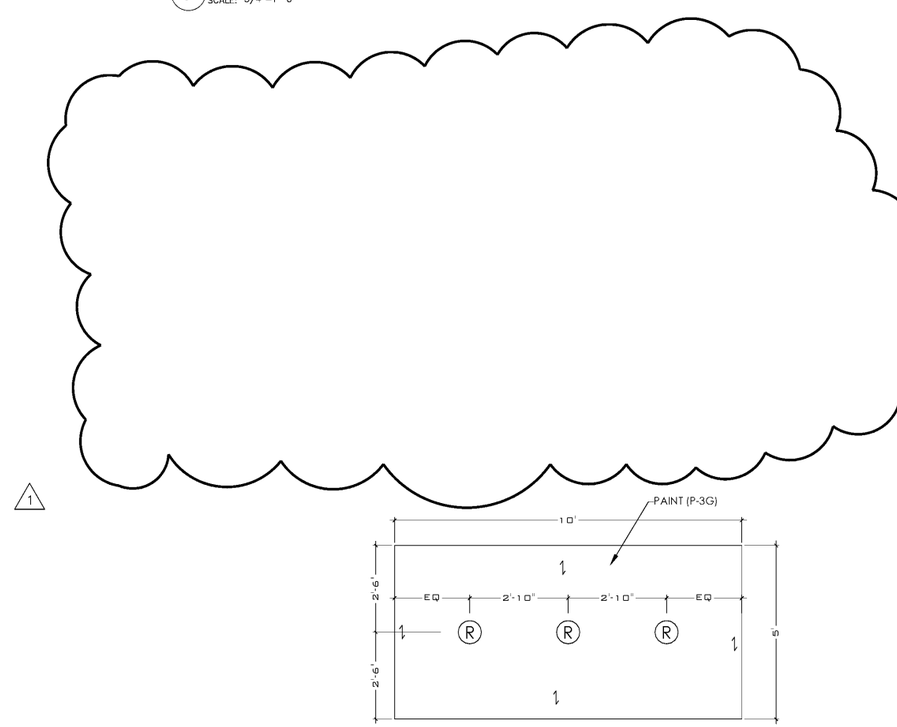

9 BEVERAGE STATION SOFFIT DETAIL
SCALE: 1/2" = 1'-0"

Order Plans @ WWW.LDILine.com

DRAWN BY: MRW | CHECKED BY: LNH, MRW | DATE: 04.11.19

NO.	DATE	REVISION
	04.11.19	RELEASED FOR CONSTRUCTION

PREMIER KINGS, INC.
5529 CARMICHAEL ROAD
MONTGOMERY, ALABAMA 36117
P:ONE:
LINDSEY@BKALABAMA.COM

james m. huckestein architect AIA
2126 Morris Avenue
Birmingham, AL 35203
Phone: (205) 324-1420
Fax: (205) 322-1778
email: info@hpkaha.com
www.hpkaha.com
architecture • planning • interior design

STATE OF GEORGIA
JAMES M. HUCKESTEIN
REGISTERED ARCHITECT
04/11/19

PROJECT #:18026.24
ROC-60 TALL 20/20 IMAGE: NOVEMBER 2018 DESIGN RELEASE
BURGER KING RESTAURANT
NEAR CORNER OF HWY 82 & JACKSON ST.
NAHUNTA, GA

REFLECTED CEILING DETAILS

A-4.1