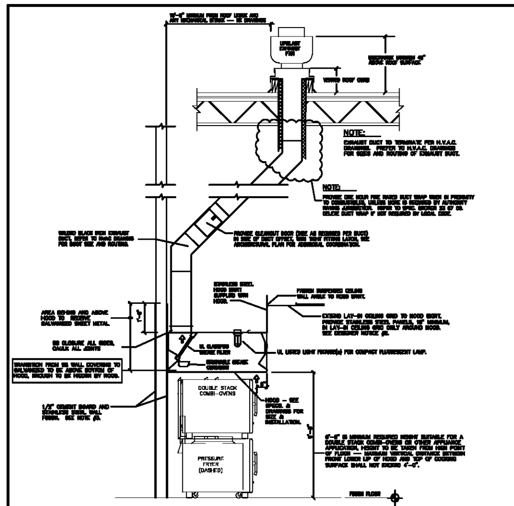

DESIGNER NOTICE:

1. BE CAREFUL OF AIR DISTRIBUTION TYPE AND PROXIMITY TO HOOD. AIR CURRENTS FROM AIR DISTRIBUTION DEVICES CAN DISRUPT PROPER HOOD OPERATION.
2. REFER TO SPEC. SECTION 05 50 00 METAL FABRICATIONS FOR INFORMATION REGARDING CASE, FINISH AND INSTALLATION OF STAINLESS STEEL WALL COVERING AND STAINLESS STEEL CEILING TILE.
3. INSTALL 1/2" CEMENT BOARD ON METAL STUD WALL EXTENDING A MINIMUM 18" ABOVE AND BEYOND EXHAUST HOOD SIDES. WHEN WALL DOESN'T BACK UP TO NONCOMBUSTIBLE EXTERIOR WALL OR THE WALL IS ACCESSIBLE FROM THE BACK, INSTALL 1/2" CEMENT BOARD IN THE SAME MANNER ON BOTH SIDES. INSTALL STAINLESS STEEL WALL COVERING OVER CEMENT BOARD AREA OF WALL THE WIDTH OF THE HOOD. THE 18" OF WALL SURFACE UNDER AND BEYOND THE EDGE OF THE HOOD CAN ONLY BE COVERED WITH NONCOMBUSTIBLE MATERIAL SUCH AS CERAMIC TILE OR ADDITIONAL SS WALL COVERING. NO COMBUSTIBLE PLUMBING OR OTHER MECHANICAL SYSTEM MATERIAL IS PERMITTED INSIDE THE WALL WHERE EXHAUST HOOD IS LOCATED INCLUDING THE 18" SPACE ON EACH SIDE UNDER AND BEYOND THE HOOD. REFER TO NOTE #2 FOR ADDITIONAL INFORMATION.
4. REFER TO HSD-4A OR HSD-4B AS INDICATED FOR ADDITIONAL INFORMATION.
5. SINGLE STACK OVENS WILL HAVE MORE CLEARANCE BETWEEN TOP OF OVEN AND BOTTOM OF HOOD.

DELI-BAKERY EXHAUST HOOD INSTALLATION

DATE: 1/29/16
SCALE: NONE
DRAWN: ZAW

HSD-4

ORIGINAL ISSUE DATE 8/1/07

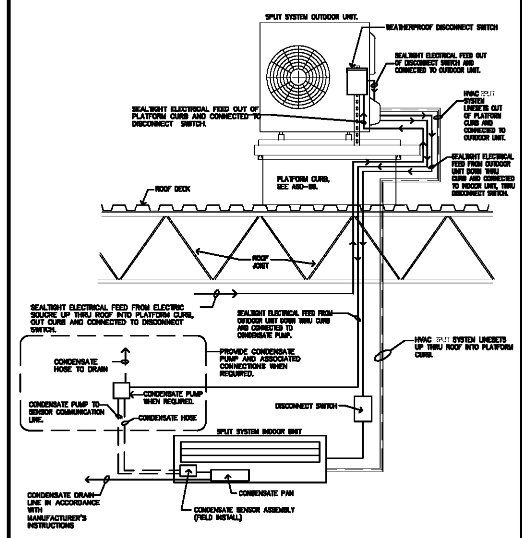


**Notes:**

1. REFER TO ASD-89 FOR PLATFORM CURB INSTALLATION AND ADDITIONAL INFORMATION.
2. SPLIT SYSTEM'S MANUFACTURERS AND MODELS VARY, REFERENCE MANUFACTURER'S INSTALLATION GUIDE FOR ADDITIONAL INFORMATION.

HVAC SPLIT SYSTEM DIAGRAM

DATE: 10/11/12
SCALE: NONE
DRAWN: ZAW

HSD-11

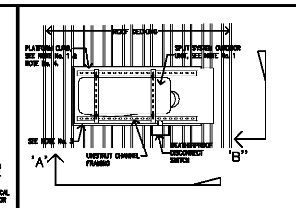

Plan

Notes:

1. INSTALL CURB AS SHOWN ON ARCHITECTURAL PLANS.
2. ATTACH CURB FLANGE TO ROOF DECKING AS INDICATED ON STRUCTURAL DRAWINGS BY ENGINEER OF RECORD — SHIM CURB AS REQUIRED TO MAKE LEVEL.
3. INSTALL PLATFORM CURB ON ROOF DECKING, MAKE ATTACHMENTS WITH SCREWS ON ALL SIDES.
4. 18" HIGH PREFABRICATED PLATFORM CURB — FEATURES:
   - 18 GAUGE GALVANIZED CONSTRUCTION
   - FULL HEIGHT GALVANIZED WELDED CORNERS
   - 18 GAUGE GALVANIZED CAP
   - PRESSURE TREATED 2x 4 WOOD
   - 3/4 PLYWOOD UNDER CAP
   - UNISTRUT CHANNEL FRAMING AND UNISTRUT ATTACHMENT HARDWARE, FOR ATTACHING SPLIT SYSTEM UNIT AND DISCONNECT SWITCH.

REFER CURB MANUFACTURER'S DETAILS FOR INFORMATION.

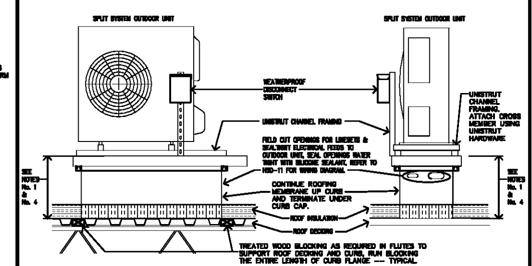


Section 'A-A'　　Section 'B-B'

PREFABRICATED NON-STRUCTURAL PLATFORM CURB

DATE: 2/13/17
SCALE: NONE
DRAWN: ZAW

ASD-89

ORIGINAL ISSUE DATE 4/15/11

ABBREVIATIONS

| | |
|---|---|
| ABV | ABOVE |
| A/C | ABOVE CEILING |
| AD | ACCESS DOOR |
| AFF | ABOVE FINISHED FLOOR |
| AFG | ABOVE FINISHED GRADE |
| AHU | AIR HANDLING UNIT |
| AP | ACCESS PANEL |
| AUX | AUXILIARY |
| AC | AIR CONDITIONING |
| BAL | BALANCING |
| B/G | BELOW GRADE |
| B/F | BELOW FLOOR |
| B/P | BACKFLOW PREVENTER |
| BTUH | BRITISH THERMAL UNITS PER HOUR |
| CFH | CUBIC FEET PER HOUR |
| CFM | CUBIC FEET PER MINUTE |
| CONC | CONDENSATE |
| COND | CONCENTRIC |
| CON | CONCENTRIC |
| CONN | CONNECTION |
| CONT | CONTINUED, CONTINUATION |
| CV | CONTROL VALVE |
| CW | COLD WATER |
| dB | DECIBELS |
| db | DRY BULB |
| D | DRAIN |
| DF | DUCT FURNACE |
| DIA (ø) | DIAMETER |
| DIM | DIMENSION |
| DN | DOWN |
| DWG | DRAWING |
| DR | DRAIN |
| EFF | EFFICIENCY |
| ELEC | ELECTRIC |
| ENT | ENTERING |
| EF | EXHAUST FAN |
| EAT | ENTERING AIR TEMPERATURE |
| EXIST | EXISTING |
| EA | EACH |
| ESP | EXTERNAL STATIC PRESSURE |
| EXH | EXHAUST |
| EG | EXHAUST GRILLE |
| F | FAHRENHEIT |
| FD | FLOOR DRAIN OR FIRE DAMPER |
| FIN | FINISHED |
| FL/FLR | FLOOR |
| FLEX | FLEXIBLE |
| FPM | FEET PER MINUTE |
| FT | FEET |
| GND | GROUND |
| GPM | GALLONS PER MINUTE |
| HP | HORSEPOWER |
| HTG | HEATING |
| HZ | HERTZ |
| IE | INVERT ELEVATION |
| IN | INCHES |
| ID | INSIDE DIMENSION |
| KW | KILOWATT |
| MECH | MECHANICAL |
| MIN | MINIMUM |
| MFR | MANUFACTURER |
| NTS | NOT TO SCALE |
| OA | OUTSIDE AIR |
| PD | PRESSURE DROP |
| PI | PRESSURE INDICATOR |
| PSI | POUNDS PER SQUARE INCH |
| PRESS | PRESSURE |
| PS | PRESSURE SWITCH |
| PSIG | POUNDS PER SQUARE INCH GAUGE |
| QTY | QUANTITY |
| RA | RETURN AIR |
| REF | REFERENCE |
| RM | ROOM |
| RL | REFRIGERANT LIQUID |
| RS | REFRIGERANT SUCTION |
| RTU | ROOF TOP UNIT |
| RAR | RETURN AIR REGISTER |
| SHT | SHEET |
| SQ FT | SQUARE FOOT |
| SA | SUPPLY AIR |
| SEN | SENSIBLE |
| SQ | SQUARE |
| TEMP | TEMPERATURE |
| TYP | TYPICAL |
| U/G | UNDER GROUND |
| UR | URINAL |
| UON | UNLESS OTHERWISE NOTED |
| V | VENT |
| VD | MANUAL VOLUME DAMPER |
| VEL | VELOCITY |
| VERT | VERTICAL |
| wb | WET BULB |
| W/ | WITH |
| WC | WATER CLOSET OR WATER COLUMN |
| WG | WATER GAUGE |
| W/O | WITHOUT |
| WTR | WATER |
| WHYD | WALL HYDRANT |

| HOOD NO. | TAG | MODEL | LENGTH | MAX. COOKING TEMP. | EXHAUST PLENUM TOTAL EXH. CFM | RISER(S) WIDTH | LENG. | HEIGHT | DIA. | CFM | S.P. | HOOD CONSTRUCTION | HOOD CONFIG. END TO END | ROW |
|---|---|---|---|---|---|---|---|---|---|---|---|---|---|---|
| 1 | H-1 K-0002315 | 6024 ND-2 | 14' 0.00" | 450 Deg. | 3150 | 10" | 25" | 4" | | 2100 | -0.409" | 304 SS Where Exposed | ALONE | ALONE |

| HOOD NO. | TAG | OPTION |
|---|---|---|
| 1 | H-1 K-0002315 | FIELD WRAPPER 18.00" High Front, Left |

| FIRE SYSTEM NO. | Tag | TYPE | SIZE | FLOW POINTS | INSTALLATION SYSTEM | LOCATION ON HOOD |
|---|---|---|---|---|---|---|
| 1 | | Ansul R102 | 3.0 | 10 | Fire Cabinet Left | Left |
| | | | | | | |

| FAN UNIT NO. | TAG | FAN UNIT MODEL # | CFM | ESP. | RPM | H.P. | B.H.P. | ø | VOLT | FLA | WEIGHT (LBS.) |
|---|---|---|---|---|---|---|---|---|---|---|---|
| 1 | EF-1 K-0002381 | NCA16FA | 3150 | 0.414 | 1377 | 1.5 | 0.816 | 3 | 208 | 4.7 | 132 |
| 2 | EF-2 K-0002581 | DR10HFA | 200 | 0.125 | 893 | 0.08 | 0.014 | 1 | 115 | 1.1 | 38 |
| 3 | EF-1 K-0002381 | NCA16FA | 3150 | 0.125 | 1158 | 0.18 | 0.089 | 1 | 115 | 1.9 | 43 |

FAN #1 DU50HFA — EXHAUST FAN (EF-1 K-0047733)

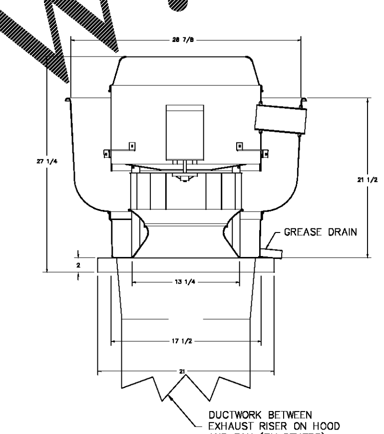


FEATURES:

- DIRECT DRIVE CONSTRUCTION (NO BELTS/PULLEYS)
- ROOF MOUNTED FANS
- RESTAURANT MODEL
- UL705 AND UL762
- VARIABLE SPEED CONTROL
- INTERNAL WIRING
- WEATHERPROOF DISCONNECT
- THERMAL OVERLOAD PROTECTION (SINGLE PHASE)
- HIGH HEAT OPERATION 300°F (149°C)
- GREASE CLASSIFICATION TESTING

NORMAL TEMPERATURE TEST
EXHAUST FAN MUST OPERATE CONTINUOUSLY WHILE EXHAUSTING AIR AT 300°F (149°C) UNTIL ALL FAN PARTS HAVE REACHED THERMAL EQUILIBRIUM, AND WITHOUT ANY DETERIORATING EFFECTS TO THE FAN WHICH WOULD CAUSE UNSAFE OPERATION.

ABNORMAL FLARE-UP TEST
EXHAUST FAN MUST OPERATE CONTINUOUSLY WHILE EXHAUSTING BURNING GREASE VAPORS AT 600°F (316°C) FOR A PERIOD OF 15 MINUTES WITHOUT THE FAN BECOMING DAMAGED TO ANY EXTENT THAT COULD CAUSE AN UNSAFE CONDITION.

OPTIONS
GREASE BOX
HINGE KIT — SHIPS LOOSE FOR CURB SUPPLIED BY OTHERS

CAPTIVE-AIRE HOODS ARE BUILT IN COMPLIANCE WITH
UL 710 AND NFPA 96
AND ARE RECOGNIZED BY ONE OR MORE OF THE FOLLOWING:

ETL SANITATION LISTED

ETL LISTED FILE# 3054804-001

FAN #2 NCA14FA — EXHAUST FAN (EF-2 K-0047735)

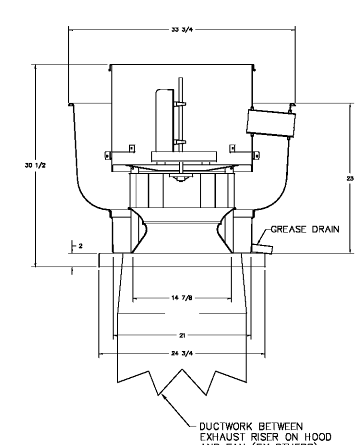


FEATURES:

- ROOF MOUNTED FANS
- RESTAURANT MODEL
- UL705 AND UL762
- AMCA SOUND AND AIR CERTIFIED
- WIRING FROM MOTOR TO DISCONNECT SWITCH
- WEATHERPROOF DISCONNECT
- HIGH HEAT OPERATION 300°F (149°C)
- GREASE CLASSIFICATION TESTING

NORMAL TEMPERATURE TEST
EXHAUST FAN MUST OPERATE CONTINUOUSLY WHILE EXHAUSTING AIR AT 300°F (149°C) UNTIL ALL FAN PARTS HAVE REACHED THERMAL EQUILIBRIUM, AND WITHOUT ANY DETERIORATING EFFECTS TO THE FAN WHICH WOULD CAUSE UNSAFE OPERATION.

ABNORMAL FLARE-UP TEST
EXHAUST FAN MUST OPERATE CONTINUOUSLY WHILE EXHAUSTING BURNING GREASE VAPORS AT 600°F (316°C) FOR A PERIOD OF 15 MINUTES WITHOUT THE FAN BECOMING DAMAGED TO ANY EXTENT THAT COULD CAUSE AN UNSAFE CONDITION.

OPTIONS
GREASE BOX
HINGE KIT — SHIPS LOOSE FOR CURB SUPPLIED BY OTHERS

DIRECT EXPANSION (DX) SPLIT SYSTEM EQUIPMENT

| INDOOR UNIT MARK | SERVICE | TOTAL S.A. (CFM) | OUTSIDE AIR (CFM) | E.S.P. (IN. W.C.) | MOTOR (HP) | AUXILIARY HEAT (KW) | WEIGHT (LBS) | BASIS OF DESIGN | OUTDOOR UNIT MARK | MIN. SEER | MIN. HSPF | WEIGHT (LBS) | BASIS OF DESIGN | COMBINED CAPACITY NOMINAL CAPACITY (TONS) | COOLING TOTAL (MBH) | SENS (MBH) | EAT (DB, °F) | EAT (WB, °F) | HEATING TOTAL (MBH) | AUXILIARY (MBH) | REMARKS |
|---|---|---|---|---|---|---|---|---|---|---|---|---|---|---|---|---|---|---|---|---|---|
| HPIU-1 | PICKUP | 1060 | 0 | 0 | 100 WATT | 0 | 55 | MSZ-D36NA | HPOU-1 | 16.0 | 9.4 | 267 | MUZ-D36NA | 3 | 36.0 | N/A | 80 | 67 | 38.0 | N/A | 1, 2, 4, 6, 7, |
| | | | | | | | | | | | | | | | | | | | | | |

NOTES (APPLIES TO ALL UNITS SCHEDULED)

A. SEE ELECTRICAL DRAWINGS FOR POWER REQUIREMENTS.
B. SUBMITTED UNIT CAPACITY SHALL BE WITHIN 10% OF SCHEDULED CAPACITY.
C. BASIS OF DESIGN IS MITSUBISHI.
D. ALL EVAPORATOR AND COOLING COILS SHALL BE INSTALLED WITH A UNIT MOUNTED CONDENSATE PUMP.
E. PROVIDE AUXILIARY CONDENSATE PUMP TO PUMP CONDENSATE TO THE ROOF, DAYTON 45WL01.

REMARKS:

1. PROVIDE A 7-DAY PROGRAMMABLE THERMOSTAT.
2. PROVIDE A LOW AMBIENT PACKAGE.
3. PROVIDE FILTER RACK WITH DISPOSABLE FILTERS.
4. PROVIDE AN ANTI-SHORT CYCLE TIMER.
5. PROVIDE AN INDOOR FAN TIME DELAY RELAY KIT.
6. DISCONNECT DEVICES SHALL BE PROVIDED AT BOTH THE INDOOR AND OUTDOOR UNITS. SEE ELECTRICAL DRAWINGS.
7. OUTDOOR UNIT SHALL BE MOUNTED ON THE ROOF.
8. CONTRACTOR SHALL INSTALL RAWAL DEVICE, MODEL NUMBER APR-410-3 FOR PART LOAD CONTROL.


J. B. Cobb Engineering, LLC
Mechanical/Industrial
Office: (678) 363-8754　97 Lakeridge Drive
Fax: (678) 363-8754　Dallas, GA 30132
Cell Phone: (404) 403-2126　jbcobbpe@bellsouth.net



CAPSTONE project services, plc
2211 WIDMAN WAY, STE. # 220
FORT MYERS, FL. 33901

GEORGIA REGISTERED No. 20848 PROFESSIONAL ENGINEER JAY BARFIELD COBB
SEAL

CAPSTONE PROJECT SERVICES, PLC
ARCHITECTURAL & CONSTRUCTION SERVICES
OFFICE LOCATIONS: ROANOKE, VA & FT. MYERS, FL
CONSULTANT


A REMODEL FOR:
# KROGER GA-214
3139 US HWY 278, N.E.　COVINGTON, GA

PROJECT: KROGER ATLANTA

04-01-2019
DATE: CONSTRUCTION SET

HVAC DETAILS
SHEET TITLE

| REVISIONS | | |
|---|---|---|
| MARK | DATE | DESCRIPTION |

PROJECT NO:
CAD DWG FILE:
DRAWN BY:
CHK'D BY:

M5.1
SHEET NO.

Order Plans @ WWW.LDILine.com