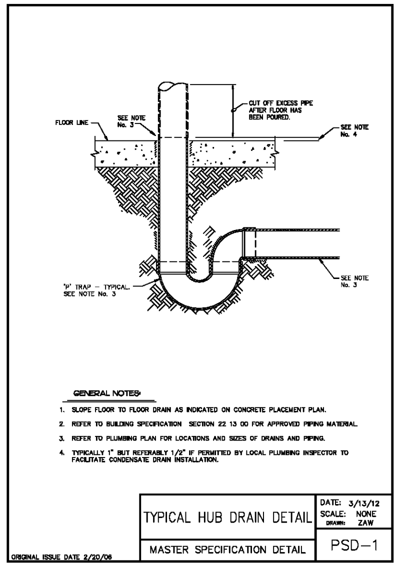

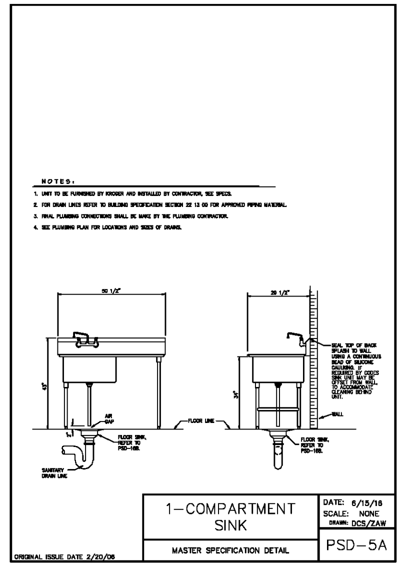

PLUMBING FIXTURE SCHEDULE

(CONTRACTOR FURNISHED EQUIPMENT)

FIXTURES IN THIS SCHEDULE OR THEIR APPROVED EQUIVALENT ARE PROVIDED BY THE PLUMBING CONTRACTOR. SUBMIT SHOP DRAWINGS ON EACH OF THESE ITEMS. REFER TO SPECIFICATIONS FOR FURTHER INFORMATION AND INSTALLATION REQUIREMENTS. VERIFY ROUGH IN REQUIREMENTS WITH MANUFACTURERS RECOMMENDATIONS. REFER TO THE ARCHITECTURAL DRAWINGS FOR THE PLUMBING FIXTURE MOUNTING HEIGHTS.

(FCO) FLOOR CLEANOUT: SIOUX CHIEF MANUFACTURING COMPANY, INC.; MODEL 834–4DNRH. HEAVY DUTY NICKEL BRONZE CLEANOUT COVER. SIZE 4" TOP ADJUSTABLE TO FINISH FLOOR, REGARDLESS OF PIPING SIZE IN WHICH FLOOR CLEANOUTS ARE INSTALLED.

(HD) HUB DRAIN: PROVIDE A P–TRAP BELOW FINISHED FLOOR AND STUB THE BELL END OF A CAST IRON PIPE 4" ABOVE FINISHED FLOOR. SIZE IS SHOWN ON FLOOR PLAN(S).

(TMV1) THERMOSTATIC MIXING VALVE: POWERS # LFE480, SOLID LEAD FREE BODY, THERMOSTATIC WAX ELEMENT, CORROSION RESISTANT INTERNAL PARTS AND INTEGRAL CHECKS, ASSE 1070 COMPLIANT, CAPABLE OF 2.2 GPM WITH A 20 PSI DIFFERENTIAL AND A MINIMUM FLOW RATE OF 0.5 GPM. SET TEMPERATURE TO 110'F FOR DUEL TEMPERATURE LAVATORIES AND HAND SINKS AND 120'F FOR SINKS. MOUNT BELOW THE PLUMBING FIXTURE WHERE INDICATED ON PLANS.

(WCO) WALL CLEANOUT: SIOUX CHIEF MANUFACTURING, INC.; MODEL 873 SERIES, SIZE 4" CLEANOUT COVER KIT, WITH BRASS PLUG AND STAINLESS STEEL POLISHED TOP.

(HB) HOSE BIBB: WOODFORD MANUFACTURING CO, MODEL 24P–CH, CHROME–PLATED BRASS 3/4" MALE INLET.

(FD–1) FLOOR DRAIN: SIOUX CHIEF MANUFACTURING COMPANY, INC.; MODEL 832–35PNR. LIGHT DUTY FLOOR DRAIN. PVC BODY WITH 5.5 INCH ROUND NICKEL BRONZE ADJUSTABLE GRATE.

GREASE INTERCEPTOR CALCULATIONS

SYMBOL	FIXTURE TYPE	COMPARTMENT QUANTITY	L	W	D	VOLUME (CU. IN.)	VOLUME (GALLONS)	% FULL	DRAIN TIME (MINUTES)	DRAINAGE LOAD (GALLONS)
PL3C–18	3–COMP SINK	3	20	18	14	15120	65.5	0.75	2	24.5
*TOTAL FIXTURE FLOW RATE (GPM):										24.5

PLUMBING SYMBOLS

SYMBOL	DESCRIPTION
— — — — —	EXISTING TO REMAIN
///////	EXISTING TO BE REMOVED
———	NEW WORK
—SAN—	SANITARY WASTE
– – –V– – –	VENT PIPING
—— – ——	DOMESTIC COLD WATER (DCW)
—— – – ——	DOMESTIC HOT WATER (DHW)
—— – – – ——	DOMESTIC HOT WATER RETURN (DHWR)
—G—	NATURAL GAS
—CD—	CONDENSATE DRAIN
—GW—	GREASE WASTE
—HD—	COMBINATION WASTE & VENT (HUB DRAINS)
—FD—	COMBINATION WASTE & VENT (EXISTING SYSTEMS)
—ID—	INDIRECT WASTE
—SW—	SOFTENED WATER
—RO—	REVERSE OSMOSIS WATER
—ST—	STORM DRAIN
—OD—	OVERFLOW DRAIN
	BALL VALVE
	GATE VALVE
	CHECK VALVE
	BALANCING VALVE
	PRESSURE REDUCING VALVE
	PRESSURE GAUGE
	GAS COCK
	THERMOSTATIC MIXING VALVE
	FLOOR DRAIN
	HUB DRAIN
	FLOOR OR GRADE CLEANOUT
	VENT THRU ROOF
	CAPPED SANITARY DRAIN PIPING BELOW SLAB
	WALL CLEANOUT
	NEW WORK POINT CONNECTION
	BUTTERFLY VALVE
	FLOOR SINK (ROUND)
	FLOOR SINK (SQUARE)

GENERAL NOTES

A. THE WORK SHALL BE EXECUTED IN STRICT CONFORMITY WITH BASE BUILDING SPECIFICATION AND WITH THE LATEST EDITION OF THE PREVAILING STATE PLUMBING AND BUILDING CODES AND ALL LOCAL REGULATIONS THAT MAY APPLY. IN CASE OF CONFLICT BETWEEN THE CONTRACT DOCUMENTS AND A GOVERNING CODE OR ORDINANCE THE MORE STRINGENT STANDARD SHALL APPLY.

B. ALL SANITARY WASTE AND VENT PIPING SHALL BE SCHEDULE 40 PVC OR HUBLESS CAST IRON AND SLOPED A MINIMUM OF 1/8" PER FOOT WHERE INSTALLED IN THE HORIZONTAL POSITION. MATERIAL SHALL COMPLY WITH CODE REQUIREMENTS.

C. DOMESTIC WATER PIPING BELOW GRADE OR SLAB SHALL BE TYPE 'K COPPER, WATER PIPING ABOVE SLAB SHALL BE CPVC. INSULATE WATER PIPING WITH 1/2" ARMAFLEX II OR RUBATEX R-180-FS OR EQUAL.

D. ALL PLUMBING FIXTURES SHALL BE SUPPLIED WITH INDIVIDUAL WATER STOPS AND CODE APPROVED TRAPS. EXPOSED PIPING SHALL BE CHROME PLATED WITH ESCUTCHEONS AT WALL PENETRATIONS.

E. NO PIPING SHALL PASS DIRECTLY OVER ELECTRICAL POWER DISTRIBUTION CABINETS OR PANELS. CONTRACTOR SHALL COORDINATE PANEL LOCATIONS PRIOR TO PIPING INSTALLATION.

F. ALL FLOOR DRAIN TRAPS SHALL BE PROVIDED WITH "ShureSeal" or 'Provent Trap Guard" refer to specification SECTION 22 13 00, paragraph 2.4).

G. ALL PLUMBING WORK SHALL BE COORDINATED WITH OTHER TRADES PRIOR TO PROCEEDING WITH INSTALLATION.

H. ALL DOMESTIC WATER BRANCH LINES SHALL HAVE BALL TYPE ISOLATION VALVES.

I. PROVIDE WATER HAMMER ARRESTORS (WHA) AT ALL WATER LINE DROPS TO FIXTURES WITH QUICK CLOSING VALVES AND OTHER SYSTEMS WITH HIGHER THAN NORMAL PRESSURE WHERE WATER HAMMER MAY BE AN ISSUE.

J. INSTALL ALL FLOOR CLEANOUTS TO CLEAR EQUIPMENT AND PROVIDE REQUIRED ACCESSIBILITY.

K. VERIFY INVERT ELEVATIONS AND EXACT LOCATIONS OF ALL OUTSIDE UTILITIES PRIOR TO INSTALLING ANY UNDERGROUND PIPING. COORDINATE WITH SITE UTILITY PLAN AND CIVIL ENGINEER.

L. PLUMBING CONTRACTOR SHALL COORDINATE THE LOCATION OF VENTS THROUGH ROOF WITH ROOFTOP UNIT AIR INTAKE LOCATIONS. VENTS MUST BE A MINIMUM 10'-0" FROM AIR INTAKES, PER CODE.

M. DO NOT ATTACH SCREWS, NAILS, HANGERS OR FASTENERS OF ANY TYPE TO ROOF DECK.

N. ALL PIPE DROPS IN SALES AREA FROM ROOF TO LOW WALLS OR EQUIPMENT SHALL BE COORDINATED AND GROUPED TOGETHER WITH OTHER MECHANICAL PIPES.

O. NO SURFACE MOUNTED WATER OR VENT LINES PERMITTED EXPOSED IN PREP ROOMS.

P. ALL CASE DRAINS MUST BE ACCESSIBLE AND SCREENED TO PREVENT RODENT ENTRY.

Q. ALL PLUMBING FIXTURES OR EQUIPMENT DRAINING INTO THE SANITARY SEWER SYSTEM VIA AN INDIRECT WASTE CONNECTION SHALL HAVE A 1" AIR GAP AS REQUIRED BY UNIFORM PLUMBING CODE.

R. PLUMBING CONTRACTOR SHALL INSTALL CHECK VALVES IN HOT & COLD WATER SUPPLY LINES TO OWNER FURNISHED FOOD PREP AND UTENSIL STAINLESS STEEL SINKS IN PREP AREAS.

S. ALL GENERAL PURPOSE WATER HEATERS SHALL BE SET AT 110° F. SET WATER HEATER SERVING UTENSIL WASHER TO 140° MINIMUM AND PROVIDE THERMOSTATIC MIXING VALVE FOR SANITIZING PURPOSES.

T. PROVIDE CHECK VALVE IN WATER LINES FOR ALL 3 COMPARTMENT SINKS AND MOP RECEPTORS TO PROHIBIT BACKFLOW.

U. ALL ISOLATION VALVES SHOULD BE INSTALLED AT 10'-6" WHERE POSSIBLE.

V. CARE SHOULD BE TAKEN IN THE ROUTING OF MECHANICALS TO MINIMIZE INTERFERENCE OF LIGHT FROM SKYLIGHT OPENINGS.

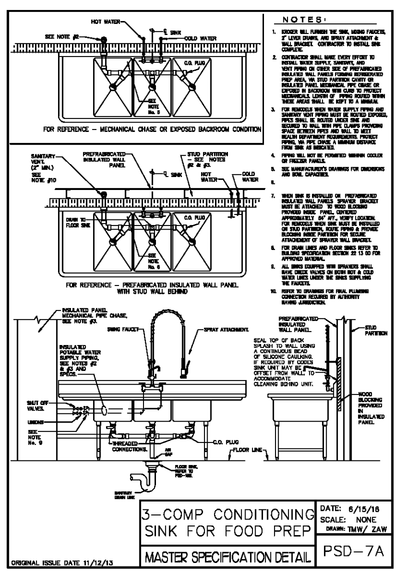

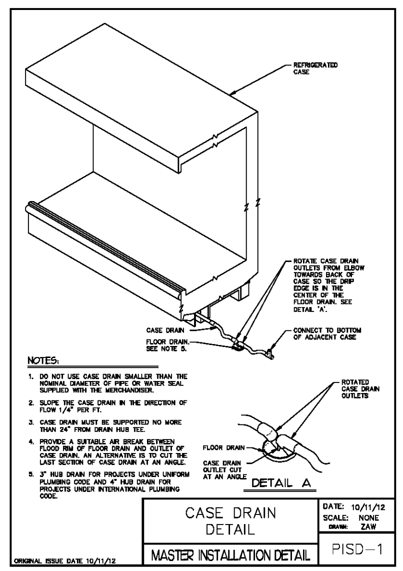

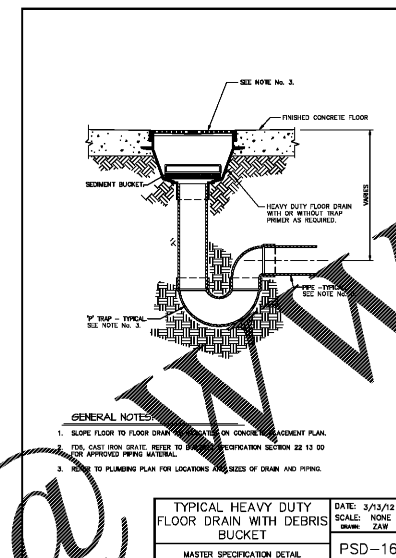

PLUMBING CONNECTION SCHEDULE (OWNER FURNISHED EQUIPMENT)

MARK	FIXTURE TYPE	CW	HW	RO	WASTE	VENT
		CONNECTION SIZES				
PL3C–18	PROVIDE VALVED WATER LINES & DRAIN FOR 3 COMPARTMENT SINK	1/2"	1/2"		1 1/2" IND	1–1/2"
PL1PC–18	PROVIDE VALVED WATER LINE & DRAIN	1/2"	1/2"		1 1/2" IND	
PLHSW	PROVIDE VALVED WATER LINE & DRAIN	1/2"	1/2"		1 1/2" IND	1–1/2"
D15CS–480	PROVIDE VALVED WATER LINE FROM FILTER	1/2"	1/2"		1 1/2" IND	1–1/2"
D15CD–480	PROVIDE VALVED WATER LINE FROM FILTER	1/2"	1/2"		1 1/2" IND	1–1/2"

PLUMBING SCHEDULE NOTES:
A. OBTAIN ALL TENANT EQUIPMENT CUTSHEETS FROM GENERAL CONTRACTOR FOR CONNECTION REQUIREMENTS.
B. PROVIDE STAINLESS STEEL PIPE ESCUTCHEONS AT ALL PENETRATIONS THROUGH FINISHES WALLS.
C. PROVIDE LINE–SIZE SHUTOFF VALVES PRIOR TO ALL EQUIPMENT CONNECTIONS.
D. PROVIDE BACKFLOW PREVENTERS PRIOR TO ALL CONNECTIONS AS REQUIRED BY LOCAL HEALTH DEPARTMENT.
E. INSTALL OR PROVIDE ALL LINE FILTERS, PRESSURE REGULATORS, AND TEMPERATURE GAUGES PER MANUFACTURERS INSTRUCTIONS.

ABBREVIATIONS

AAV	AIR ADMITTANCE VALVE	ID	INDIRECT WASTE
AFF	ABOVE FINISHED FLOOR	IE	INVERT ELEVATION
AFG	ABOVE FINISHED GRADE	INT	INTERCEPTOR
BFF	BELOW FINISHED FLOOR	LAV	LAVATORY
BFG	BELOW FINISHED GRADE	MC	MECHANICAL CONTRACTOR
BFP	BACK FLOW PREVENTER	MPG	MEDIUM PRESSURE GAS
CD	CONDENSATE DRAIN	MR	MOP RECEPTOR
CFH	CUBIC FEET PER HOUR	NFPA	NATIONAL FIRE PROTECTION ASSOCIATION
CO	CLEAN OUT	NTS	NOT TO SCALE
CWV	COMBINATION WASTE & VENT	OVD	OVERFLOW DRAIN
DCW	DOMESTIC COLD WATER	ODL	OVERFLOW DRAIN LEADER
DHW	DOMESTIC HOT WATER	PC	PLUMBING CONTRACTOR
DHWR	DOMESTIC HOT WATER RETURN	PRO	PRODUCE
DS	DOWNSPOUT	PRV	PRESSURE REDUCING VALVE
EC	ELECTRICAL CONTRACTOR	RD	ROOF DRAIN
ECO	EXPOSED CLEANOUT	RDL	ROOF DRAIN LEADER
EW	EYEWASH	SAN	SANITARY
EWC	ELECTRIC WATER COOLER	SD	STORM DRAIN
EWH	ELECTRIC WATER HEATER	SF	SEAFOOD
EXP	EXPANSION TANK	SK	SINK
FCO	FLOOR CLEAN OUT	SP	SUMP PUMP
FD	FLOOR DRAIN	ST	STORM PIPING
FDC	FIRE DEPARTMENT CONNECTION	TD	TRENCH DRAIN
FPWH	FREEZE PROOF WALL HYDRANT	TMV	THERMOSTATIC MIXING VALVE
FS	FLOOR SINK	TP	TRAP PRIMER
FSR	FIRE SPRINKLER RISER	TYP	TYPICAL
G	GAS	U.N.O.	UNLESS NOTED OTHERWISE
GCO	GRADE CLEANOUT	UR	URINAL
GW	GREASE WASTE	V	VENT

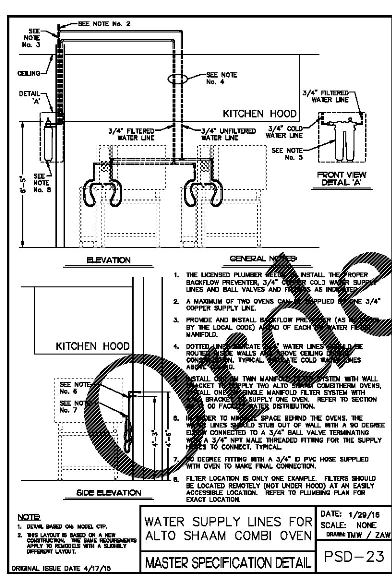

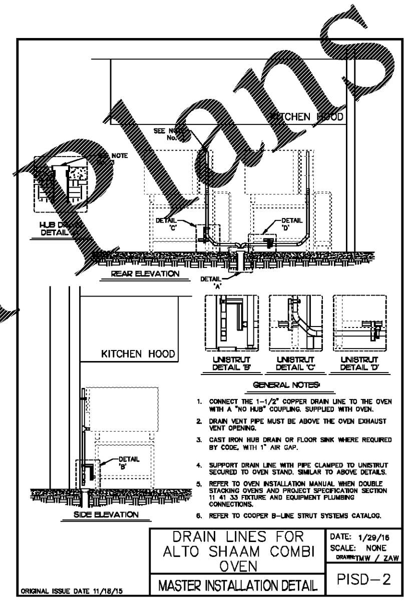

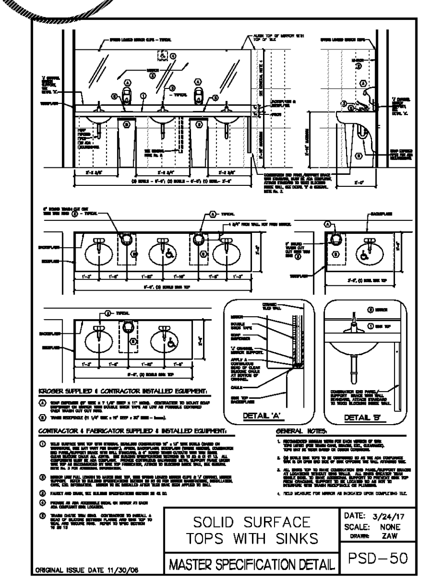

QUANTITY	NAME	STATUS	PLUMBING REQUIREMENTS	VENDOR	MODEL
1	D275MPLW-19B	NEW	PROVIDE 1" VALVED HOT & COLD WATER LINE, WATER HEATER NOT REQUIRED IN KIOSK UNLESS REMOTE FROM A HOT WATER SOURCE, (2) 3" FLOOR SINKS	LK INDUSTRIES	MARKET PLACE
1	B109G	NEW	PROVIDE 1/2" VALVED & FILTERED COLD WATER LINE W/PRESSURE REGULATOR SET AT 45 P.S.I. MOUNTED AT 8'-0" AB. FL.; 1 1/4" VALVED GAS LINE (300,000 BTU) 8'-0" AB. FL.; 2" HUB DRAIN (NEAR RIGHT REAR CORNER AS YOU FACE OVEN) FOR STEAM CONDENSATE)	BAXTER	OV500G2
1	B124B-40	NEW	PROVIDE 1/2" VALVED & FILTERED COLD WATER LINE AT 85" AFF, 2" FLOOR DRAIN IS AT THE LEFT REAR CORNER AS YOU FACE THE PROOFER	BAXTER	BPW2E
2	PLC-2B	NEW	PROVIDE VALVED WATER LINES & DRAIN	N/A	N/A
1	PLDWF1	NEW	PROVIDE 3/4" MNPT COLD WATER LINE FOR DELI SINGLE COMBI OVEN WATER FILTER SYSTEM	CINCINNATI ICE	CIKR1CF
1	D15CS-208	NEW	PROVIDE ONE 3/4" VALVED & FILTERED C.W. AND ONE 3/4" VALVED UNTREATED C.W. LINE. (30-90PSI), 4" HUB DRAIN TIED TO GREASE LADEN LINE	ALTO SHAAM	CTP7-20E
1	D275M	NEW	PROVIDE 9/16" UNEF COMPRESSION WATER CONNECTION	STARBUCKS	1E+07
1	DCFMD4H	NEW	PROVIDE 3" DRAIN	HUSSMANN CHINO	IM-04-I4-R
1	DMDLR4HC	NEW	PROVIDE 3" HUB DRAIN	HUSSMANN CHINO	Q3-SS
2	DS8HE	NEW	3" HUB DRAIN	HUSSMANN	ESBDS
1	F5DN12HX	NEW	3" HUB DRAIN	HUSSMANN	FL5NXLEP
1	GE235-2C	NEW	REQUIRES COLD WATER HOSE BIBB	HYDRO SYSTEMS (P&G)	SP TBD
2	M5DFRNG12HX	NEW	3" HUB DRAIN	HUSSMANN	M5XEP
3	M5DFRNG8HX	NEW	3" HUB DRAIN	HUSSMANN	M5XEP
1	MS8HC-2	NEW	PROVIDE 3" HUB DRAIN. (NO MISTING SYSTEM REQUIRED)	HUSSMANN CHINO	Q3-MS-EP
1	P54	NEW	PROVIDE 1/2" VALVED WATER LINE FROM THE RO UNIT IN PRODUCE PREP	PRODEW	MCTRL-PRM
2	P5DGR12HX	NEW	3" HUB DRAIN	HUSSMANN	D5XLEP
2	P5DGR8HX	NEW	3" HUB DRAIN	HUSSMANN	D5XLEP
3	PGD12HE	NEW	3" HUB DRAIN	HUSSMANN	DD5X-12LP
2	PGD8HE	NEW	3" HUB DRAIN	HUSSMANN	DD5X-8LP
1	S5DFRN8HX	NEW	3" HUB DRAIN	HUSSMANN	M5XEP
1	PL1F	NEW	PROVIDE VALVED WATER LINES & DRAIN	UNIVERSAL STAINLESS	KR-DI-202014
1	PL1PC-18	NEW	PROVIDE VALVED WATER LINES & DRAIN FOR 1 COMPARTMENT PREP SINK (NO DRAINBOARD)	UNIVERSAL STAINLESS	K-1N181814
1	PL1PC	NEW	PROVIDE VALVED WATER LINES & DRAIN	UNIVERSAL STAINLESS	K-1N24
1	PLHSW	NEW	PROVIDE VALVED WATER LINES & DRAIN FOR HAND SINK (WALL MOUNT)	UNIVERSAL STAINLESS	K-CHS-1-WM

Order Plans @ www.LDIILine.com

INTERPLAN LLC
ARCHITECTURE
ENGINEERING
INTERIOR DESIGN
PROJECT MANAGEMENT

604 COURTLAND STREET
SUITE 100
ORLANDO, FLORIDA 32804
PH 407.645.5008
FX 407.629.9124

SEAL:

THIS DOCUMENT IS NOT FOR REGULATORY APPROVAL, PERMITTING, OR CONSTRUCTION.

A WITHIN THE WALLS REMODEL FOR:
KROGER STORE # 478 - MARIETTA - GA
3162 JOHNSON FERRY RD.,
MARIETTA, GA 30062

Kroger
GENERAL OFFICE FACILITY ENGINEERING
1014 VINE ST, CINCINNATI, OHIO 45202
PH (513) 762-1467 FAX: (513) 762-4012

NO DATE REMARKS
REVISIONS

PROJECT NO: 2019.0125
DATE: 03.18.2019

P0.1
PLUMBING LEGEND SYMBOLS & GENERAL NOTES

CHECKED: PD DRAWN: ROH

COPYRIGHT © 2019 INTERPLAN LLC RESERVES COPYRIGHT & OTHER RIGHTS RESTRICTING THESE DOCUMENTS TO THE ORIGINAL SITE OR PURPOSE FOR WHICH THEY WERE PREPARED. REPRODUCTIONS, CHANGES OR ASSIGNMENTS ARE PROHIBITED.