INTRUSION ALARM SYMBOLS LEGEND

SYMBOL	
PANEL	INTRUSION ALARM CONTROL PANEL
KPD	INTRUSION ALARM KEYPAD
OH	OVERHEAD DOOR CONTACT
RC	RECESSED DOOR CONTACT
GC	GATE CONTACT
RH	ROOF HATCH CONTACT
MD	MONITORING DEVICE
(sounder symbol)	SOUNDER
M	WALL MOUNTED MOTION DETECTOR
MS	CEILING MOUNT MOTION DETECTOR

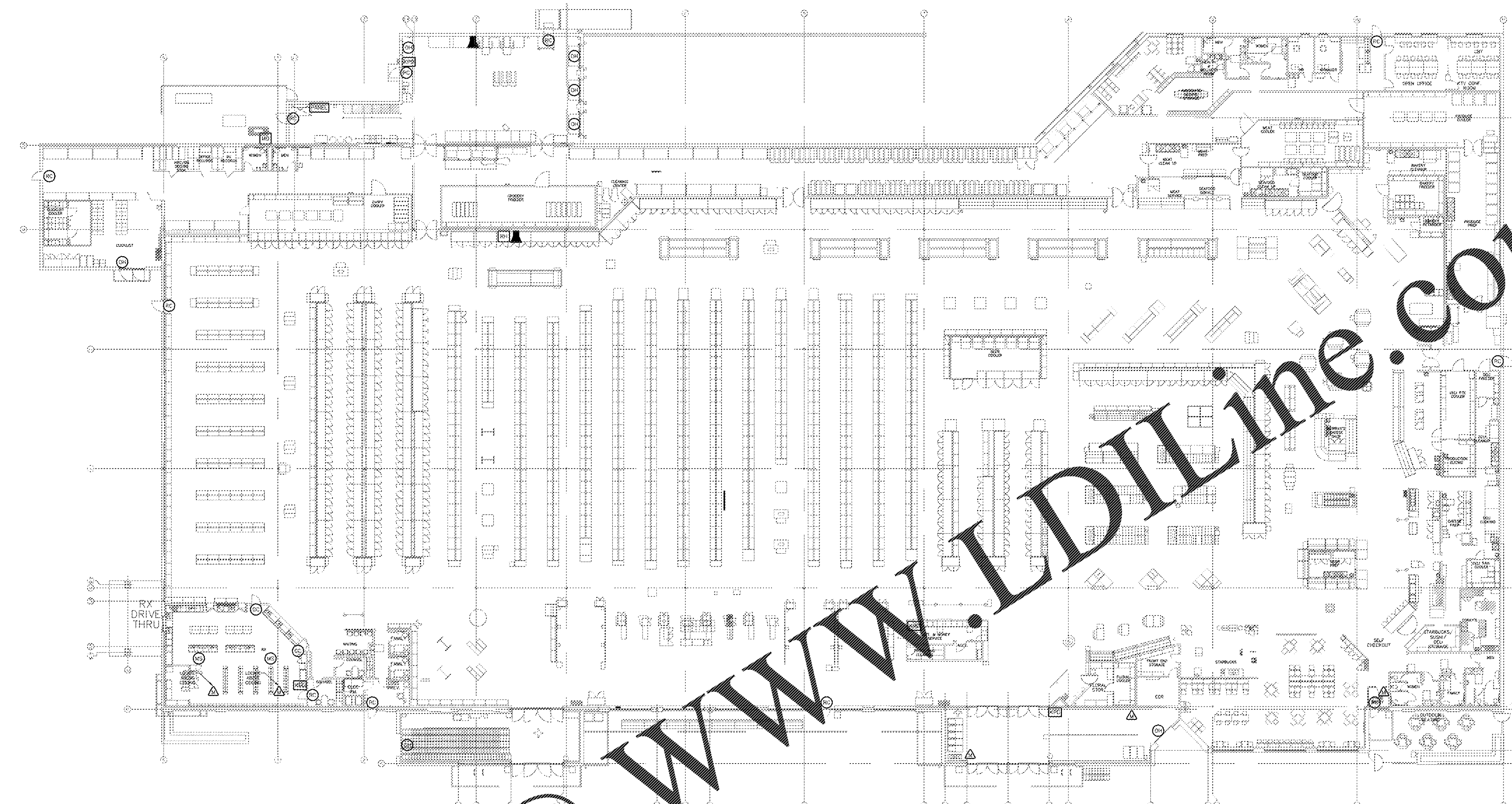

1. ALL WIRE AND CABLING SHALL BE APPROVED FOR SECURITY ALARM SYSTEM USE AND BE LABELED AS NEC TYPE CL2 OR HIGHER.
2. CONDUIT SHALL CONSIST OF 3/4" VERTICAL RUNS WITH 2 PAIR CL2 CABLE FROM EACH SECURITY ALARM DEVICE TO A 9127U (POPIT) ADDRESSABLE POINT MODULE (POPIT) LOCATED WITHIN A 4" x 4" x 2-1/8" SQUARE BOX WITH COVER. THIS INSTALLATION SHALL MATCH KROGER SHOP DRAWINGS AS CLOSELY AS PRACTICALLY POSSIBLE. THE ALARM CONTRACTOR SHALL INSTALL AND TERMINATE ALL SECURITY EQUIPMENT.
3. VERIFY MOUNTING LOCATIONS OF MOTION DETECTORS WITH CURRENT FIXTURE PLAN. DO NOT MOUNT MOTION DETECTORS BEHIND RACKING OR ANY OTHER OBSTRUCTIONS AS INDICATED ON THE MOUNTING DETAIL.
4. OPERATOR KEYPADS - ALARM CONTRACTOR TO PROVIDE 3/4" CONDUIT VERTICAL RUN TO THE BAR JOIST. LEAVE STUB AT 48" A.F.F. FOR KEYPAD AND BACKBOX PROVIDED WITH KEYPAD.
5. THE ALARM CONTRACTOR AND ELECTRICAL CONTRACTOR SHALL CONTACT KROGER WITH ANY COMMENTS, EXCEPTIONS, AND/OR RESERVATIONS TO THE DRAWINGS AND SPECIFICATIONS.
6. ALL CONDUIT, BOXES (UNLESS OTHERWISE INDICATED), FITTINGS, COUPLINGS, CONNECTORS, STRAPS, SUPPORTS, PULL STRINGS, BUSHINGS, ETC., SHALL BE PROVIDED AND INSTALLED BY THE ALARM CONTRACTOR.
7. THE ELECTRICAL CONTRACTOR SHALL PROVIDE ALL LINE VOLTAGE (120 VAC MAX) CIRCUITING IN SEPARATE CONDUIT. ALL EXPOSED CABLE BELOW THE BOTTOM BAR JOIST, OR OTHER ROOF STRUCTURE PROTRUDING LOWER, OR OTHER LOCATIONS WHERE THE CABLE MAY BECOME EXPOSED AND/OR DAMAGED, SHALL BE WITHIN A STEEL CONDUIT.
8. ALL AREAS EXPOSED TO THE ENVIRONMENT SHALL HAVE THEIR ASSOCIATED CABLING AND TERMINATION POINTS CONCEALED WITHIN WEATHERPROOF CONDUIT PER THE NATIONAL ELECTRIC CODE. CABLING, CONDUIT AND ACCESSORIES SHALL BE LISTED FOR WET LOCATIONS PER THE NATIONAL ELECTRIC CODE.
9. THE ALARM CONTRACTOR SHALL OBTAIN FINAL APPROVAL FROM STATE AND LOCAL AUTHORITIES.
10. SECURITY EQUIPMENT SHALL BE SUPPLIED BY THE ALARM CONTRACTOR UNLESS OTHERWISE NOTED.
11. THE ALARM CONTRACTOR IS RESPONSIBLE FOR RECEIVING THE SYSTEM AT THE SITE OR PREDETERMINED LOCATION AND TO REVIEW ORDER FOR COMPLETENESS, INSPECT ALL CARTONS FOR DAMAGE AND CORRECT LABELING. ONCE RECEIVED, THE ALARM CONTRACTOR SHALL TAKE FULL RESPONSIBILITY FOR THE STORAGE AND PROTECTION OF ALL MATERIALS. ANY EQUIPMENT LOST OR STOLEN SHALL BE REPLACED AT THE COST OF THE ALARM CONTRACTOR.
12. PRIMARY POWER: THE ELECTRICAL CONTRACTOR SHALL PROVIDE A DEDICATED, LOCKED AND CLEARLY LABELED 120 VAC POWER CIRCUIT TO THE SECURITY SYSTEM. THIS CIRCUIT SHALL BE CONNECTED TO THE EMERGENCY POWER SYSTEM AND SHALL BE PROPERLY RATED TO CONTINUOUSLY POWER ALL POINTS AND FUNCTIONS INDEFINITELY IN ALL ALARM CONDITIONS.
13. THE ALARM CONTRACTOR SHALL PROVIDE ALL JUNCTION BOXES AND COVER PLATES PER MANUFACTURERS INSTRUCTIONS AND CODES. THE ALARM CONTRACTOR SHALL LABEL ALL INTRUSION ALARM JUNCTION BOXES AS "SECURITY SYSTEM" WITH DECAL OR OTHER APPROVED PERMANENT MARKINGS INCLUDING THE DEVICES ANNUNCIATION DESCRIPTION AND ZONE NUMBER. NOTE: DO NOT LABEL JUNCTION BOXES PRIOR TO FINAL PAINTING.
14. INSTALLATION OF THE SECURITY SYSTEM SHALL BE IN STRICT COMPLIANCE WITH MANUFACTURER'S RECOMMENDATIONS. CONSULT THE MANUFACTURER'S CONTROL PANEL AND ASSOCIATED EQUIPMENT INSTALLATION MANUALS FOR ALL WIRING DIAGRAMS, SCHEMATICS, PHYSICAL EQUIPMENT SIZES, ETC. BEFORE BEGINNING SYSTEM INSTALLATION.
15. AS INDICATED ON THE KROGER SHOP DRAWINGS, EACH SYSTEM ALARM POINT OR ZONE OF THE SYSTEM SHALL BE UNIQUELY LABELED WITHIN THE SECURITY CONTROL PANEL AND AT THE DEVICES.
16. THE ALARM CONTRACTOR SHALL INSTALL ALL END OF LINE RESISTORS AT THE DEVICE TO ENSURE CIRCUIT INTEGRITY PER MANUFACTURER'S INSTRUCTIONS.
17. THE ALARM CONTRACTOR SHALL NUMBER CODE CONDUCTORS AT BOTH ENDS APPROPRIATELY AND PERMANENTLY FOR IDENTIFICATION AND SERVICING OF THE SYSTEM. LABELING SHALL CLEARLY IDENTIFY THE CIRCUIT, ZONE, AND/OR DEVICE SERVED.
18. THE ALARM CONTRACTOR SHALL PROGRAM THE CONTROL PANEL PER THE DRAWINGS AND SPECIFICATIONS. IT MAY BE NECESSARY FOR THE ALARM CONTRACTOR TO MAKE ADJUSTMENTS TO THE PROGRAM. THE ALARM CONTRACTOR SHALL INCLUDE IN HIS BID, ADEQUATE TIME TO PROVIDE ADDITIONAL MODIFICATIONS IF NECESSARY.
19. IF THE ALARM CONTRACTOR CANNOT MEET THE REQUIREMENTS OF THE SPECIFICATIONS AND/OR DOES NOT HAVE THE INSTALLATION EXPERIENCE INSTALLING, TESTING AND DEMONSTRATING THE OPERATION OF THE SYSTEM, THE ALARM CONTRACTOR SHALL SUBCONTRACT THE INSTALLATION TO A QUALIFIED SECURITY COMPANY, WHICH CAN MEET THE REQUIREMENTS OF THE SPECIFICATION.
20. THE ALARM CONTRACTOR SHALL PROVIDE A PROFESSIONAL UNIFORMED GUARD SERVICE IF THE SYSTEM IS NOT COMPLETE TWO (2) WEEKS PRIOR TO TURNOVER. THE GUARD SERVICE SHALL BE PROVIDED UNTIL SUCH SYSTEM IS FOUND ACCEPTABLE AND APPROVED BY KROGER. THE ALARM CONTRACTOR SHALL BE RESPONSIBLE FOR ALL COSTS INCURRED BY NOT MEETING THESE REQUIREMENTS.
21. THE ALARM CONTRACTOR SHALL SUPPLY A FULLY TESTED (INCLUDING CONFIRMATION NUMBER OR A PRINT OUT VERIFYING THAT ALL POINTS HAVE BEEN TESTED AND RECEIVED AT THE MONITORING COMPANY) AND OPERATIONAL SECURITY SYSTEM, TRAINING ON THE OPERATION AND PROPER USE OF THE INSTALLED SYSTEMS (A MINIMUM OF 2 CLASSES SHALL BE PROVIDED), INCLUDING 24 HOUR PHONE NUMBERS FOR QUESTIONS AND SERVICE REQUESTS TO THE KROGER REPRESENTATIVE PER THE SPECIFICATION TWO (2) WEEKS PRIOR TO TURNOVER. THE ALARM CONTRACTOR SHALL RECEIVE WRITTEN DOCUMENTATION FROM KROGER MANAGEMENT THAT THE DEMONSTRATION HAS BEEN COMPLETED.
22. IF THE SYSTEM CANNOT BE 100% COMPLETED (I.E. CONSTRUCTION OF THE BUILDING NOT COMPLETE), THE AFFECTED DEVICES SHALL BE BYPASSED (RESISTORS PLACED AT EACH MODULE) AS TO ALLOW THE SYSTEM TO BE FULLY OPERATIONAL TWO (2) WEEKS PRIOR TO TURNOVER. THE AFFECTED DEVICES SHALL BE ACTIVATED IMMEDIATELY UPON FINAL CONSTRUCTION OF THE AFFECTED AREA AND PROPER OPERATION IS TESTED AND VERIFIED BY KROGER MANAGEMENT.
23. THE ALARM CONTRACTOR SHALL OBTAIN FROM THE KROGER MANAGEMENT, CONTACT LISTS FOR NOTIFICATION PURPOSES IN CASE OF SYSTEM ACTIVATION. THE NOTIFICATION LIST SHALL INCLUDE CONTACT PHONE NUMBERS, INDIVIDUALS TITLE, PASS CODES AND PASS CODE ACCESS LEVELS. THIS INFORMATION SHALL BE TRANSMITTED TO THE CENTRAL STATION UPON RECEIPT, TWO WEEKS PRIOR TO TURNOVER. THE ALARM CONTRACTOR SHALL BE RESPONSIBLE FOR PROGRAMMING ADDITIONAL CODES INTO THE SYSTEM AS NECESSARY.
24. IF THE ALARM CONTRACTOR REQUIRES ASSISTANCE TROUBLE SHOOTING THE SYSTEM THE ALARM CONTRACTOR SHALL CONTACT THE MANUFACTURER OF THE PRODUCT.
25. THE ALARM CONTRACTOR SHALL PERFORM AN INTRUSION ALARM SYSTEM ACCEPTANCE TEST IN THE PRESENCE OF KROGER TWO WEEKS PRIOR TO TURNOVER. THE ALARM CONTRACTOR SHALL NOTIFY THE KROGER DESIGNER TEN (10) WORKING DAYS PRIOR TO THE COMPLETION OF THE INSTALLATION FOR SCHEDULING. THE CONTRACTOR SHALL BUDGET FOR TWO (2) CONSECUTIVE DAYS OF TESTING, HOWEVER THE CONTRACTOR SHALL BE RESPONSIBLE TO BE PRESENT UNTIL SUCH TIME THAT ALL SYSTEMS ARE FOUND ACCEPTABLE. THE CONTRACTOR SHALL FURNISH 2 TECHNICIANS FAMILIAR WITH THE INSTALLATION, LIFTS, HAND TOOLS, RADIOS AND ANY OTHER EQUIPMENT NEEDED FOR TESTING. THE CONTRACTOR SHALL BE RESPONSIBLE FOR ALL ADDITIONAL COSTS INCURRED BY THE FAILURE TO PERFORM THE TESTS ON THE SCHEDULED DATE, WITHIN THE BUDGETED TIME (2 CONSECUTIVE DAYS), AND/OR RETESTS DUE TO SYSTEM FAILURE (COSTS INCLUDE, BUT ARE NOT LIMITED TO TRAVEL, LODGING, PER DIEM, TRANSPORTATION AND LABOR).
26. THE ALARM CONTRACTOR, UPON COMPLETION, SHALL PROVIDE (5) SETS TO THE GENERAL CONTRACTOR AS A MINIMUM: AS-BUILT DRAWINGS, LETTER OF COMPLETION INDICATING THE SYSTEM HAS BEEN FULLY TESTED LOCALLY AND REMOTELY, SIGNALS HAVE BEEN VERIFIED TO THE CENTRAL STATION AND OPERATION OF THE SYSTEM HAS BEEN FULLY DEMONSTRATED TO KROGER PERSONNEL (INCLUDE NAMES OF THOSE WHO WERE DEMONSTRATED TO), USERS AND INSTALLATION MANUALS AND CUT SHEETS ON ALL ALARM DEVICES INSTALLED ON THE PREMISES. THE ALARM CONTRACTOR SHALL RECEIVE WRITTEN SIGN OFF FROM THE GENERAL CONTRACTOR INDICATING ALL OF THE ABOVE HAVE BEEN RECEIVED.
27. AT THE END OF EACH WORK DAY DURING THE INSTALL, THE ALARM CONTRACTOR SHALL CLEAN UP ALL DEBRIS, FINGERPRINTS, DUST FROM DRILLING, ETC. ANY WORK NOT COMPLETED SHALL BE LEFT IN A MANNER THAT WILL NOT AFFECT ANY OTHER OPERATION.
28. THE INSTALLING CONTRACTOR SHALL COORDINATE THE INSTALLATION OF HIGH VOLTAGE CONDUIT WITH THE ELECTRICAL CONTRACTOR FOR EXACT LOCATIONS AND SCHEDULING. THE ALARM CONTRACTOR SHALL INSTALL EQUIPMENT ENCLOSURES (POWER SUPPLIES, CONTROL PANELS, ETC.) FOR THE BURGLAR AND FIRE ALARM SYSTEMS. ALL WIRING OUTSIDE THE BUILDING SHALL BE ENCASED IN WEATHERPROOF CONDUIT AND JUNCTION BOXES. THE ALARM CONTRACTOR SHALL REFER TO THE KROGER BURGLAR (BA) AND FIRE ALARM (FA) SYSTEM DRAWINGS AND SPECIFICATIONS FOR REQUIREMENTS PERTAINING TO SYSTEM INSTALLATION INCLUDING BUT NOT LIMITED TO CONDUIT SIZES, BACK BOX AND JUNCTION BOX LOCATIONS. THE ALARM CONTRACTOR SHALL COORDINATE THE INSTALLATION WITH THE ELECTRICAL CONTRACTOR. THE ALARM CONTRACTOR SHALL VERIFY START AND COMPLETION DATES WITH THE SITE SCHEDULE AND GENERAL CONTRACTOR TO ENSURE WORK IS COMPLETED WITHIN THE REQUIRED TIME FRAME.

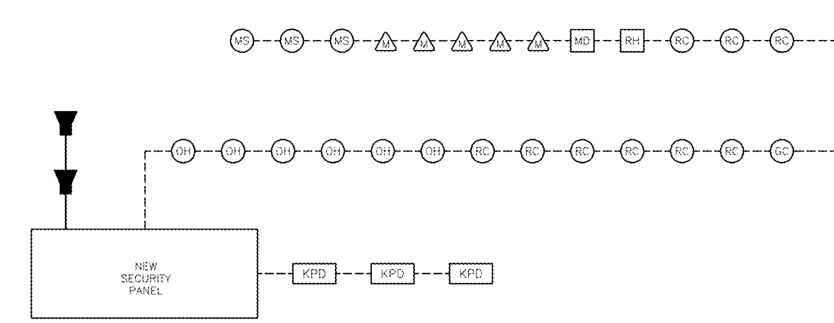

INTRUSION ALARM DEVICE LAYOUT

SCALE: 1"=20'

Order Plans @ WWW.LDILine.com

Kroger

KROGER
STORE #473

2013 UNIVERSITY AVENUE
OXFORD, MISSISSIPPI 38655

A DEVELOPMENT OF:
THE KROGER COMPANY

naos
Naos Design Group Of Mississippi, PLLC.
MARC BREETZ, ARCHITECT
645 Lakeland East Drive
Suite 101
Flowood, Mississippi 39232
(p) 303.759.5777
(f) 720.360.4281
ARCHITECT OF RECORD

CDS
COMMERCIAL DESIGN SYSTEMS, INC.
13825 SW GALBREATH DRIVE
SHERWOOD, OREGON 97140
503.855.7500 (F)503.625.5002
INTERIOR DECOR

Pickering
Pickering Firm, Inc.
Architecture · Engineering
Planning · Surveying
6775 Lenox Center Court, Suite 300
Memphis, TN 38115
901.726.0810
ENGINEER OF RECORD:
STRUCTURAL
MECHANICAL
ELECTRICAL
CIVIL ENGINEER

V-SOFT
INFRASTRUCTURE
11260 CHESTER ROAD
CINCINNATI, OH 45246
T: 513-898-3619
LOW VOLTAGE

telgian
TELGIAN CORPORATION
10230 SOUTH 50TH PLACE
SUITE 100
PHOENIX, AZ 85044
T: (877) 835-4426
HTTP://WWW.TELGIAN.COM
FIRE PROTECTION

ISSUE LOG

NO.	REV.	DESCRIPTION	DATE
1	-	PERMIT SET	12/06/18
2	-	BID SET	03/21/19

JOB:	SCALE:
2018041	

SHEET NO.
INTRUSION ALARM DEVICE LAYOUT

BA1.0

COPYRIGHT © 2018 NAOS DESIGN GROUP OF MISSISSIPPI, PLLC. THESE DRAWINGS OR ANY PART THEREOF MAY NOT BE REPRODUCED IN ANY FORM OR BY ANY METHOD, FOR ANY PURPOSE, WITHOUT PRIOR WRITTEN CONSENT FROM NAOS.