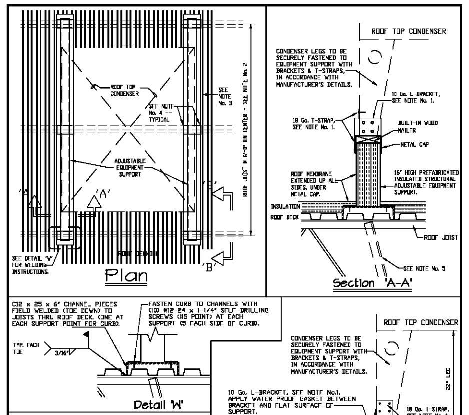

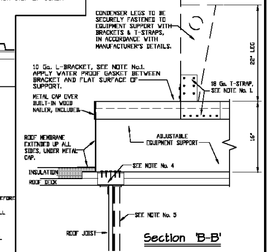

Notes:

1. ADJUSTABLE EQUIPMENT SUPPORTS, 10 Ga. BRACKETS & 18 Ga. T-STRAPS, ARE CONTRACTOR SUPPLIED AND CONTRACTOR INSTALLED ITEMS. SECURE BRACKETS & T-STRAPS TO EQUIPMENT SUPPORT AND EQUIPMENT WITH FASTENERS SUPPLIED BY EQUIPMENT SUPPORT MANUFACTURER.
2. THE CONDENSERS SIZES VARY, REFER TO DRAWINGS FOR REQUIRED SPACING OF EQUIPMENT SUPPORT LEGS. SUPPORT LENGTH TO SPAN FROM CENTER OF FIRST JOIST TO CENTER OF LAST JOIST. ADJUST EQUIPMENT SUPPORTS SO THAT CONDENSERS SIT LEVEL. CONTRACTOR TO SHIM SUPPORT AS NEEDED WHEN ROOF SLOPE EXCEEDS THE STANDARD LIMIT OF ADJUSTMENT.
3. ROOFER TO INSTALL CRICKET WHERE EQUIPMENT SUPPORT IMPEDES DIRECTION OF DRAINAGE.
4. C12 x 25 x 6" CHANNEL PIECES, TWO PLACES AT EACH JOIST AND SUPPORT LOCATIONS. CONTRACTOR SUPPLIED AND INSTALLED BEFORE SUPPORTS HAVE BEEN SET.
5. FOR SEISMIC OR OTHER STRUCTURAL CONCERNS PROVIDE AND INSTALL ADDITIONAL STEEL STRUCTURE REINFORCEMENT AS INDICATED ON STRUCTURAL DRAWINGS BY ENGINEER OF RECORD.
6. SUPPORT TO STRUCTURAL STEEL ATTACHMENT METHOD WHEN INDICATED ON STRUCTURAL DRAWING BY ENGINEER OF RECORD SHALL SUPERCEDE THE ATTACHMENT RECOMMENDATION CONTAINED HERE IN.

SUPPORT FOR CONDENSER - WITH LEGS - EXISTING CONST.	DATE: 3/2/15 SCALE: NONE DRAWN: ZAW
MASTER SPECIFICATION DETAIL	ASD-82

ORIGINAL ISSUE DATE 1/30/15

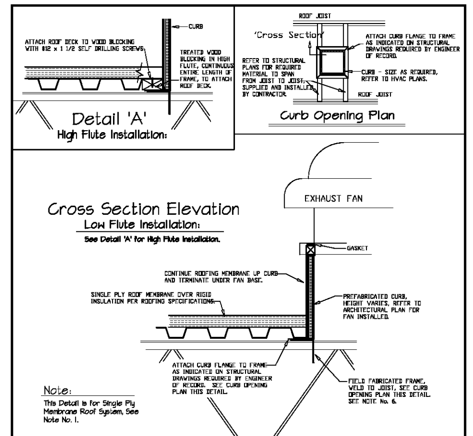

NOTES:

1. REFERENCE ROOFING DETAILS ASD-64C FOR ROOF FLASHING.
2. TWO SIDE OF CURB SHALL BE SUPPORTED BY FRAME, NO ADDITIONAL STEEL SUPPORT REQUIRED.
3. SEE KROGER STANDARD SPECIFICATIONS FOR ADDITIONAL INFORMATION.
4. FOR SEISMIC OR OTHER STRUCTURAL CONCERNS PROVIDE AND INSTALL ADDITIONAL STEEL STRUCTURE REINFORCEMENT AS INDICATED ON STRUCTURAL DRAWINGS BY ENGINEER OF RECORD.
5. ATTACH CURB TO STRUCTURAL STEEL AS INDICATED ON STRUCTURAL DRAWINGS BY ENGINEER OF RECORD.
6. NEW STORE CONSTRUCTION TO REMAIN UNPAINTED, PAINT TO MATCH EXISTING FOR EXPANSION REMODELS.

— INSTALLATION SEQUENCE:

1. SET STRUCTURAL STEEL JOIST.
2. INSTALL FIELD FABRICATED FRAME.
3. INSTALL FAN CURB.
4. INSTALL STEEL DECK.
5. INSTALL INSULATION AND ROOFING.
6. PAINT STRUCTURAL STEEL & DECK TO MATCH EXISTING FOR EXPANSION REMODELS.

PREFABRICATED FAN CURB	DATE: 11/10/16 SCALE: NONE DRAWN: ZAW
MASTER SPECIFICATION DETAIL	ASD-88

ORIGINAL ISSUE DATE 10/1/09

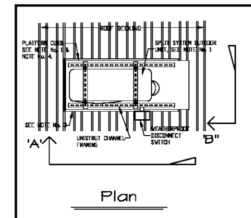

Notes:

1. INSTALL CURB AS SHOWN ON ARCHITECTURAL PLANS.
2. ATTACH CURB FLANGE TO ROOF DECKING AS INDICATED ON STRUCTURAL DRAWINGS BY ENGINEER OF RECORD — SHIM CURB AS REQUIRED TO MAKE LEVEL.
3. INSTALL PLATFORM CURB ON ROOF DECKING, MAKE ATTACHMENTS WITH SCREWS ON ALL SIDES.
4. 18" HIGH PREFABRICATED PLATFORM CURB — FEATURES:
   - 18 GAUGE GALVANIZED CONSTRUCTION
   - FULL HEIGHT GALVANIZED WELDED CORNERS
   - 18 GAUGE GALVANIZED CAP
   - PRESSURE TREATED 2x 4 WOOD
   - 3/4 PLYWOOD UNDER CAP
   - UNISTRUT CHANNEL FRAMING AND UNISTRUT ATTACHMENT HARDWARE, FOR ATTACHING SPLIT SYSTEM UNIT AND DISCONNECT SWITCH.

REFER CURB MANUFACTURER'S DETAILS FOR INFORMATION.

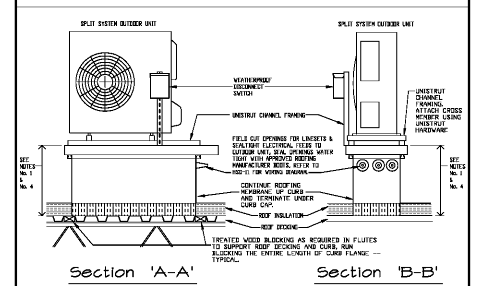

PREFABRICATED NON-STRUCTURAL PLATFORM CURB	DATE: 1/22/18 SCALE: NONE DRAWN: ZAW
MASTER SPECIFICATION DETAIL	ASD-89

ORIGINAL ISSUE DATE 4/15/11

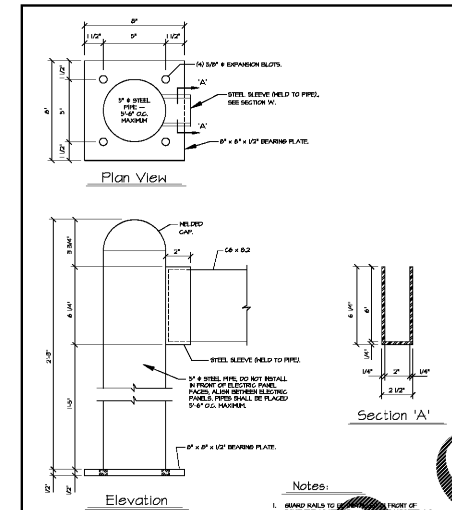

Notes:

1. GUARD RAILS TO BE INSTALLED IN FRONT OF EQUIPMENT AS NEEDED -- I.E. FLOOR MOUNTED A.C. UNITS, SPRINKLER RISERS, ETC.
2. GUARD RAILS TO BE INSTALLED AFTER EQUIPMENT HAS BEEN SET AND OPERATIONAL. COORDINATE LOCATIONS AND DETAILS WITH KROGER ENGINEER.

LIFT-OUT GUARD RAIL	DATE: 1/11/11 SCALE: NONE DRAWN: jq
MASTER SPECIFICATION DETAIL	ASD-91A

ORIGINAL ISSUE DATE 1/11/11

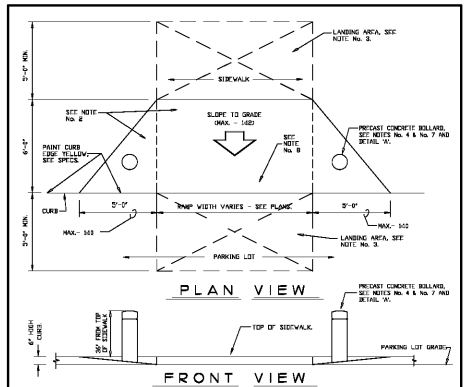

Notes:

1. DIMENSIONS ARE BASE UPON 6" HIGH CURB.
2. RAMP SURFACE SHALL HAVE NON-SLIP CONCRETE FINISH.
3. RAMP SHALL HAVE LANDING AREA (SLOPE SHALL NOT EXCEED 1:12) AT BOTH TOP AND BOTTOM, FULL WIDTH OF RAMP AND A MINIMUM CLEAR 5'-0" LONG DIMENSION.
4. PRECAST CONCRETE BOLLARDS, SEE SPECS., CONTRACTOR SUPPLIED AND INSTALLED.
5. PRECAST CONCRETE BOLLARDS, TO INCLUDED DOMED TOP, 1" REVEAL, SAND BLAST FINISH WITH 2" PVC INSERT FOR REBAR DOWEL.
6. PRECAST CONCRETE BOLLARDS TO BE INSTALLED IN MASTIC INCLUDING 24" #9 REBAR DOWEL, INSTALLED WITH 17" EXPOSED. CAULK BASE TO SIDEWALK. FIELD CUT PRECAST BOLLARD TO MATCH RAMP SLOPE.
7. PRECAST CONCRETE BOLLARD -- TYPICAL ALL RAMP LOCATIONS.
   -- BOLLARD TO BE POSITIONED IN MIDDLE OF THE SLOPED SIDES OF RAMPS TO DETER SHOPPING CARTS FROM CROSSING AND POSSIBLY TURNING OVER.
   -- BUILDING COLUMN MAY BE USED IN LIEU OF BOLLARD IF COLUMN OCCURS WITHIN SIDE SLOPED AREA.
8. PROVIDE SPECIAL SURFACE ON RAMP WHERE SPECIFICALLY REQUIRED BY STATE OR LOCAL CODES.

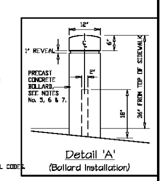

RAMP AT PEDESTRIAN CROSSING	DATE: 8/8/11 SCALE: NONE DRAWN: ZAW
MASTER SPECIFICATION DETAIL	ASD-124A

ORIGINAL ISSUE DATE 2/20/06

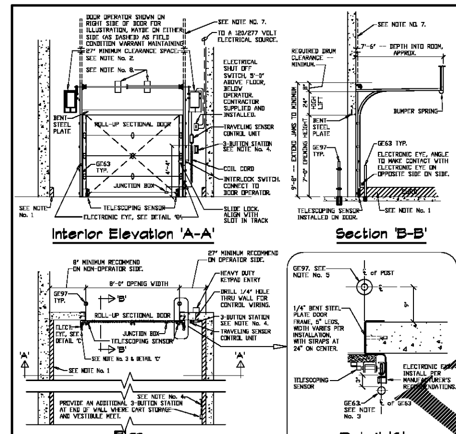

Notes:

1. 4" CONCRETE CURB IN CART STORAGE AREA.
2. DOOR OPERATOR SHALL BE SECURELY ATTACHED DIRECTLY TO BLOCK WALL OR WOOD BLOCKING IN WALL IF STUD WALL, CAPABLE OF SUPPORTING OVER 100 lbs. REFER TO MANUFACTURER'S INSTALLATION GUIDE FOR ADDITIONAL INFORMATION.
3. STAINLESS STEEL REMOVABLE POST GE63 CENTERED TO PROTECT DOOR TRACK, PROVIDE 3" OF CLEARANCE BETWEEN POST AND TRACK FOR ELECTRONIC EYE. OWNER PROVIDED, CONTRACTOR INSTALLED. SEE ASD-19.
4. CONTRACTOR TO PROVIDE 1/2" CONDUIT AND ALL NECESSARY LOW VOLTAGE CONTROL WIRING FOR COMPLETE OPERATION AND MAKE CONNECTIONS WITH DOOR INSTALLER.
5. ROLLER POST GE97. SEE SPECIFICATIONS.
6. DOOR, OPERATOR AND CONTROLS. SEE SPECIFICATIONS.
7. REFER TO ARCHITECTURAL PLANS FOR TYPE OF TRACK CONFIGURATION.
8. CONTRACTOR TO PROVIDE TWO (2) 6" x 12" x 3/16" THICK STEEL PLATES FOR TORSION SPRING ATTACHMENT. STEEL PLATES SHALL BE MOUNTED FLUSH WITH DOOR FRAME SECURELY ATTACHED TO WALL TO HANDLE TORQUE OF TORSION SPRINGS. COORDINATE EXACT LOCATION OF STEEL PLATES USING DOOR SUBMITTAL DRAWING.
9. SET AUTO CLOSE TIMER TO INITIATE CLOSING AFTER 90 SECONDS.

Detail Based on:

DOOR — Wayne Dalton & Overhead Door Sectional Insulated Commercial Door, 8'-6"W x 7'...
DOOR OPENER — Liftmaster, Logic3 Model ...
EXTERIOR KEYPAD — Liftmaster ...
3-BUTTON STATION — Liftmaster ...
ELECTRONIC EYE — Liftmaster, CPS ...
TELESCOPING SENSOR — Miller Edge, Inc., MIR-...

BASCART DOOR INSTALLATION WITH JACKSHAFT DOOR OPERATOR	DATE: 11/10/16 SCALE: NONE DRAWN: ZAW
MASTER SPECIFICATION DETAIL	ASD-149A

ORIGINAL ISSUE DATE 4/15/...

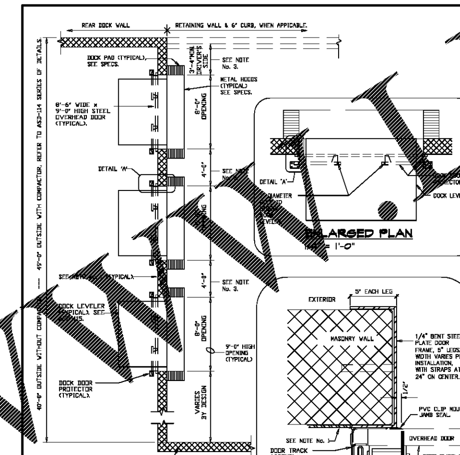

NOTE:

1. DOCK TRUCK UNLOADING LIGHT, SEE ASD-62A AND FIXTURE PLAN.
2. INSTALL DOOR PROTECTORS AT DOCK DOOR WITH LEVELER.
3. RECOMMENDED WIDTH CLEARANCE BETWEEN TRUCKS AND ADJACENT WALLS.

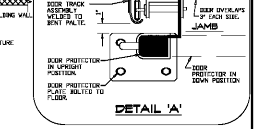

Detail Based on:

CartStop LDP by McCue Corporation.
For 6' - 8' Wide Doors Part No. CSLDP-KIT

DOCK DOORS INSTALLATION	DATE: 1/30/15 SCALE: NONE DRAWN: ZAW
MASTER SPECIFICATION DETAIL	ASD-152

ORIGINAL ISSUE DATE 2/20/06

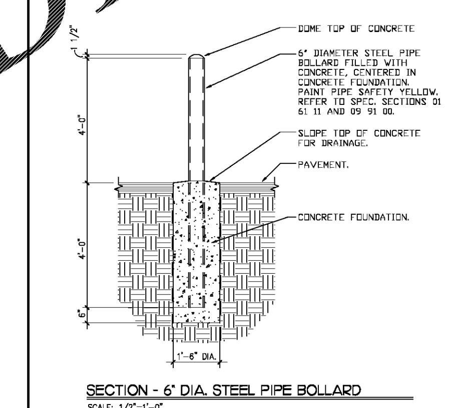

SECTION - 6" DIA. STEEL PIPE BOLLARD

SCALE: 1/2"=1'-0"

EXTERIOR STEEL BOLLARD DETAIL	DATE: 1/29/16 SCALE: NONE DRAWN: ZAW
MASTER SPECIFICATION DETAIL	ASD-154

ORIGINAL ISSUE DATE 7/29/14

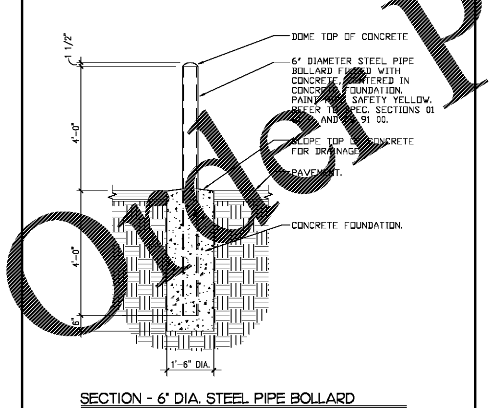

SECTION - 6" DIA. STEEL PIPE BOLLARD

SCALE: 1/2"=1'-0"

EXTERIOR STEEL BOLLARD DETAIL	DATE: 1/29/16 SCALE: NONE DRAWN: ZAW
MASTER SPECIFICATION DETAIL	ASD-154

ORIGINAL ISSUE DATE 7/29/14

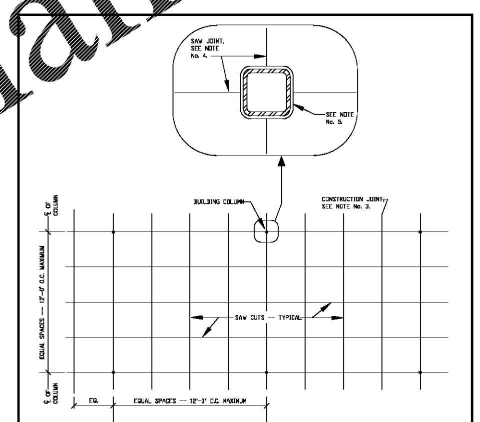

NOTES:

1. PATTERN TO BE CONTINUOUS THROUGHOUT SALES AREA.
2. FOR JOINT FILLER COLOR, SEE BUILDING SPECIFICATIONS.
3. SAW CUT CONTRUCTION JOINTS, 1/8" WIDTH JOINT, JOINT DEPTH 1/4 THE SLAB THICKNESS OR A MINIMUM OF 1".
4. USE POWER CONCRETE SAW TO CUT JOINTS AS CLOSE AS POSSIBLE TO COLUMNS OR WALL FACE, THEN CONTINUE JOINT TO COLUMN OR WALL FACE WITH HAND GRINDER. WIDTH AND DEPTH OF HAND GRIND JOINT SHALL MATCH WIDTH AND DEPTH OF JOINTS MADE WITH POWER CONCRETE SAW.
5. INSTALL FOAM JOINT MATERIAL WRAPPED AROUND COLUMN. INSTALL JOINT FILLER. SEE BUILDING SPECIFICATIONS.

CONCRETE PATTERN TYP. FOR POLISHED CONCRETE SALES AREA FLOORS	DATE: 11/21/14 SCALE: NONE DRAWN: ZAW
MASTER SPECIFICATION DETAIL	ASD-156

ORIGINAL ISSUE DATE 11/15/05

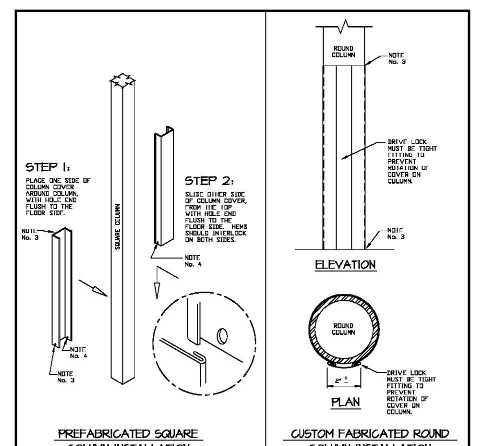

NOTES:

1. SQUARE COLUMN COVERS ARE PREFABRICATED OWNER SUPPLIED AND CONTRACTOR INSTALLED. BECAUSE ROUND COLUMNS CAN VARY SO MUCH IN SIZE THEY ARE TO BE CONTRACTOR FABRICATED AND INSTALLED FROM OWNER SUPPLIED 48" x 108" SHEETS OF FINISHED STEEL. REFER TO DIVISION 01 FOR COLOR AND FINISH.
2. ALL COLUMN COVERS TO BE 4'-0" HIGH, OR MATCH HEIGHT OF EXISTING WRAPPED COLUMNS.
3. AFTER COVERS HAVE BEEN INSTALLED CONTRACTOR TO CAULK A CONTINUOUS BEAD OF CLEAR PAINTABLE SILICONE SEALANT AROUND TOP AND BOTTOM OF COVERS TO SECURE IN PLACE.
4. HOLES ON THE COLUMN COVERS ARE FROM THE MANUFACTURER USED FOR PAINTING PURPOSES. COLUMN COVERS SHOULD BE INSTALLED WITH THE HOLES DOWNWARDS TOWARDS THE FLOOR.

SALES AREA COLUMN COVERS	DATE: 11/15/17 SCALE: NONE DRAWN: ZAW
MASTER SPECIFICATION DETAIL	ASD-157

ORIGINAL ISSUE DATE 7/15/08

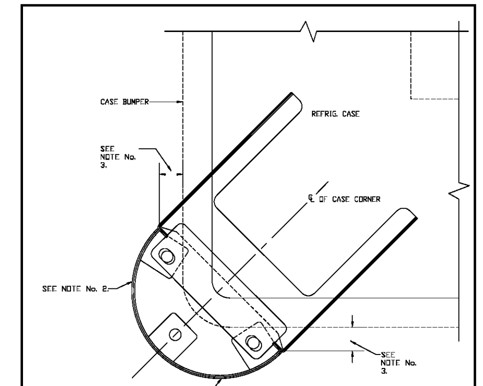

NOTES:

1. DESIGNED FOR USE WITH ISLAND REFRIGERATED CASES (WITH STRAIGHT FRONTS) IN DAIRY, MEAT, SEAFOOD AND DELI DEPARTMENTS. CASE CORNER GUARD. REFER TO SECTION 11 41 13 PARAGRAPH 2.2 B GENERAL STORE FIXTURE INSTALLATION IN SPECIFICATIONS. REFER TO FIXTURE PLAN FOR QUANTITY AND LOCATIONS.
2. CASE CORNER GUARD TO BE INSTALLED, AFTER CASE HAS BEEN SET. INSTALL CASE GUARD (AND FLANGE EXTENSION) AS CLOSE TO CASE AS POSSIBLE PER MANUFACTURER'S INSTALLATION INSTRUCTIONS.
3. MAXIMUM 1" PER MANUFACTURER'S INSTALLATION INSTRUCTIONS.
4. FOR CASES WITH SHALLOW TOE KICK IT MAY BE NECESSARY TO FIELD CUT FLANGE FOR PROPER POSITIONING OF GUARD.

Note:

Detail Based On Installation From National Cart Co. A5050004 (5050004 And 5050010).

REFRIGERATED CASE CORNER GUARD	DATE: 6/5/15 SCALE: NONE DRAWN: ZAW
MASTER SPECIFICATION DETAIL	ASD-160

ORIGINAL ISSUE DATE 7/6/06

KROGER
STORE #473

2013 UNIVERSITY AVENUE
OXFORD, MISSISSIPPI 38655

A DEVELOPMENT OF:
THE KROGER COMPANY

naos
Naos Design Group Of Mississippi, PLLC.
MARC BREETZ, ARCHITECT
645 Lakeland East Drive
Suite 101
Flowood, Mississippi 39232
(p) 303.759.5777
(f) 720.360.4281
ARCHITECT OF RECORD

CDS
COMMERCIAL DESIGN SYSTEMS, INC.
13825 SW GALBREATH DRIVE
SHERWOOD, OREGON 97140
503.885.7000 (F)503.625.8002
INTERIOR DECOR

Pickering
Pickering Firm, Inc.
Architecture · Engineering
Planning · Surveying
6775 Lenox Center Court, Suite 300
Memphis, TN 38115
901.726.0810
ENGINEER OF RECORD:
STRUCTURAL
MECHANICAL
ELECTRICAL
CIVIL ENGINEER

V-SOFT INFRASTRUCTURE
1260 CHESTER ROAD
CINCINNATI, OH 45246
T: 513-898-3819
LOW VOLTAGE

telgian
TELGIAN CORPORATION
10230 SOUTH 50TH PLACE
SUITE 100
PHOENIX, AZ 85044
T: (877) 835-4426
HTTP://WWW.TELGIAN.COM
FIRE PROTECTION

ISSUE LOG

NO.	REV.	DESCRIPTION	DATE
1	-	PERMIT SET	12/06/18
2	-	BID SET	03/21/19

JOB:	SCALE:
2018041	NOT TO SCALE

SHEET NO.

A5.1.4

ARCHITECTURAL STANDARD DETAILS (ASD)

COPYRIGHT © 2019 NAOS DESIGN GROUP OF MISSISSIPPI, PLLC. THESE DRAWINGS, OR PARTS THEREOF, MAY NOT BE REPRODUCED IN ANY FORM, BY ANY METHOD, FOR ANY PURPOSE, WITHOUT PRIOR WRITTEN CONSENT FROM NAOS.

Order Plans @ WWW.LDIILine.com