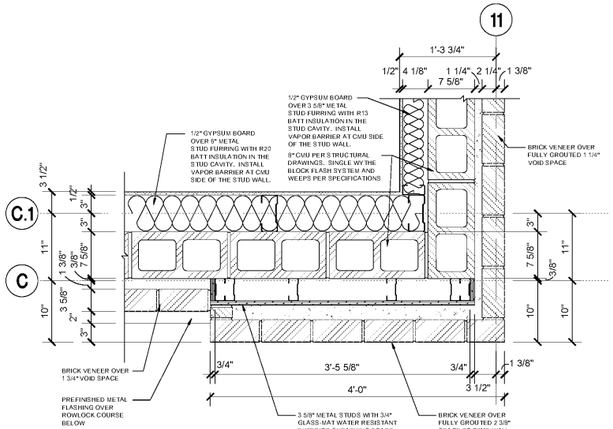

ABOVE WAINSCOT
01 PLAN DETAIL
SCALE: 1 1/2" = 1'-0"

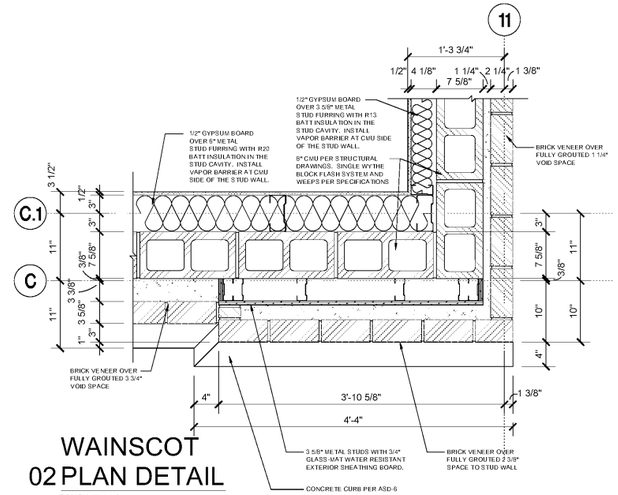

WAINSCOT
02 PLAN DETAIL
SCALE: 1 1/2" = 1'-0"

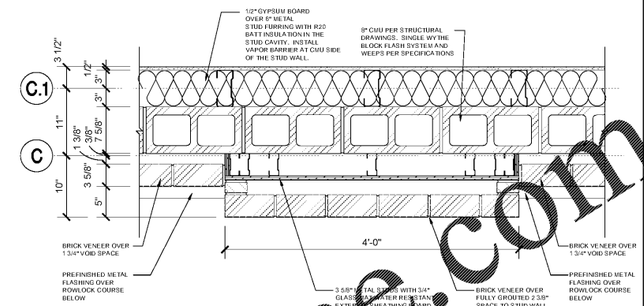

ABOVE WAINSCOT
03 PLAN DETAIL
SCALE: 1 1/2" = 1'-0"

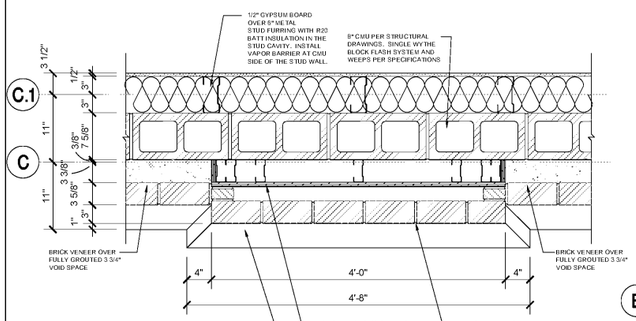

WAINSCOT
04 PLAN DETAIL
SCALE: 1 1/2" = 1'-0"

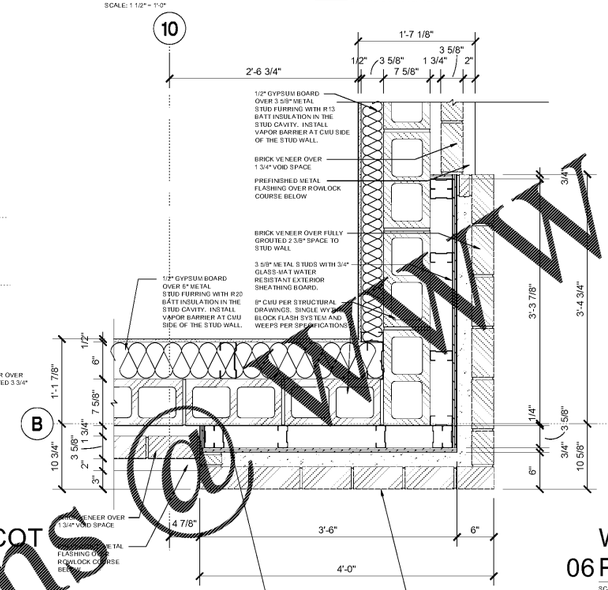

ABOVE WAINSCOT
05 PLAN DETAIL
SCALE: 1 1/2" = 1'-0"

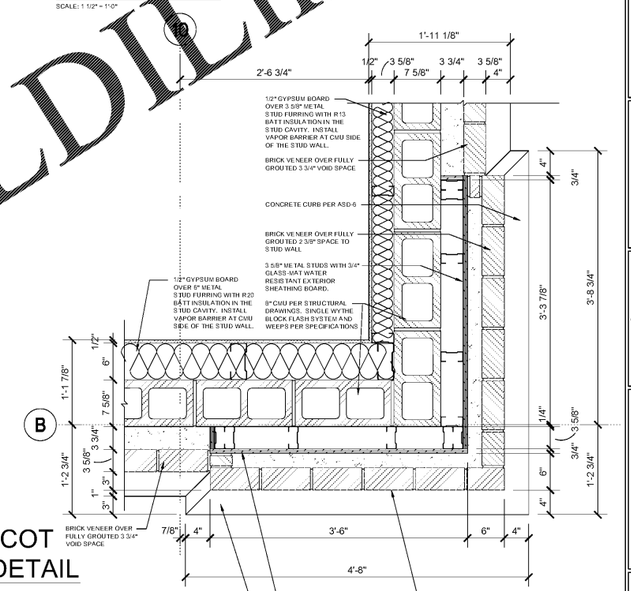

WAINSCOT
06 PLAN DETAIL
SCALE: 1 1/2" = 1'-0"

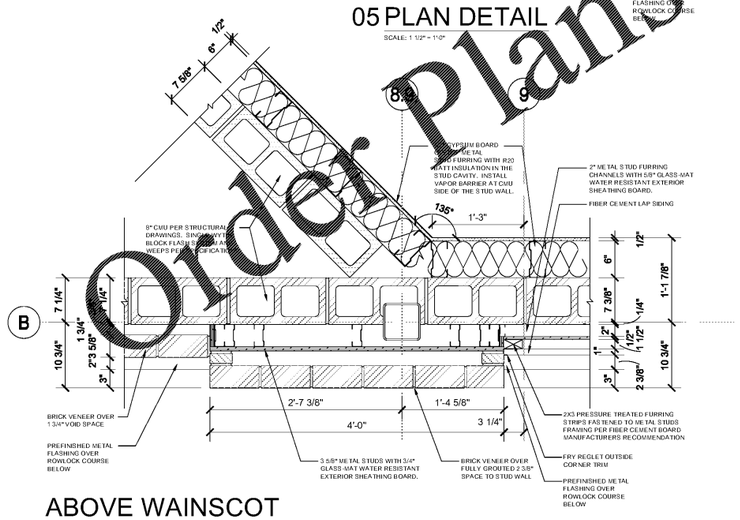

ABOVE WAINSCOT
07 PLAN DETAIL
SCALE: 1 1/2" = 1'-0"

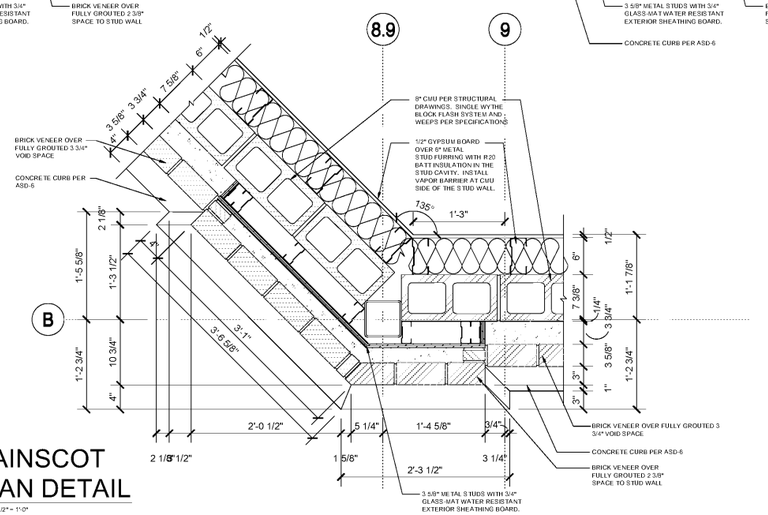

WAINSCOT
08 PLAN DETAIL
SCALE: 1 1/2" = 1'-0"

Order Plans @ WWW.LDDline.com

KROGER
STORE #473

2013 UNIVERSITY AVENUE
OXFORD, MISSISSIPPI
38655

A DEVELOPMENT OF:
THE KROGER COMPANY

naos
Naos Design Group Of Mississippi, PLLC.
MARC BREETZ, ARCHITECT
645 Lakeland East Drive
Suite 101
Flowood, Mississippi 39232
(p) 303.759.5777
(f) 720.360.4281
ARCHITECT OF RECORD

CDS
COMMERCIAL DESIGN SYSTEMS, INC.
13925 SW GALBREATH DRIVE
SHERWOOD, OREGON 97140
503.885.7000 (F)503.625.8002
INTERIOR DECOR

Pickering
Pickering Firm, Inc.
Architecture · Engineering
Planning · Surveying
6775 Lenox Center Court, Suite 300
Memphis, TN 38115
901.726.0810
ENGINEER OF RECORD:
STRUCTURAL
MECHANICAL
ELECTRICAL
CIVIL ENGINEER

V-SOFT INFRASTRUCTURE
8260 CHESTER ROAD
CINCINNATI, OH 45239
T: 513-698-3599
LOW VOLTAGE

telgian
TELGIAN CORPORATION
10230 SOUTH 50TH PLACE
SUITE 100
PHOENIX, AZ 85044
T: (877) 835-4426
HTTP://WWW.TELGIAN.COM
FIRE PROTECTION

ISSUE LOG

NO.	REV.	DESCRIPTION	DATE
1		PERMIT SET	12/05/18
2		BID SET	03/21/19

JOB:	SCALE:
2018041	1 1/2" = 1'-0"

SHEET NO.

A4.1.1

PLAN DETAILS
ELEVATIONS

COPYRIGHT © 2019 NAOS DESIGN GROUP OF MISSISSIPPI, PLLC. THESE DRAWINGS OR PARTS THEREOF, MAY NOT BE REPRODUCED IN ANY FORM, BY ANY METHOD, FOR ANY PURPOSE, WITHOUT PRIOR WRITTEN CONSENT FROM NAOS.