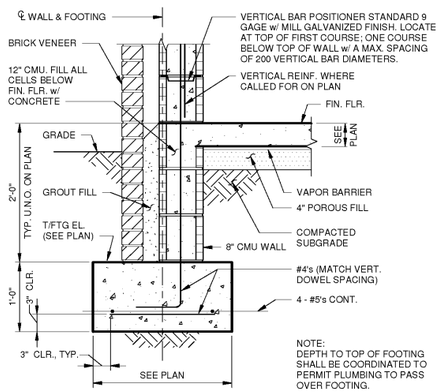

1 S-301 **SECTION**
SCALE: 1" = 1'-0"

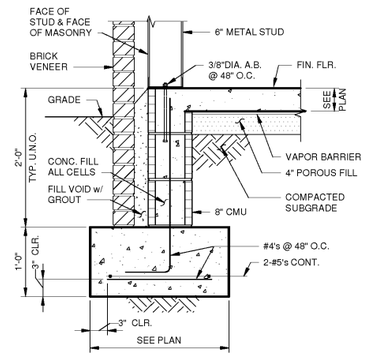

2 S-301 **SECTION**
SCALE: 1" = 1'-0"

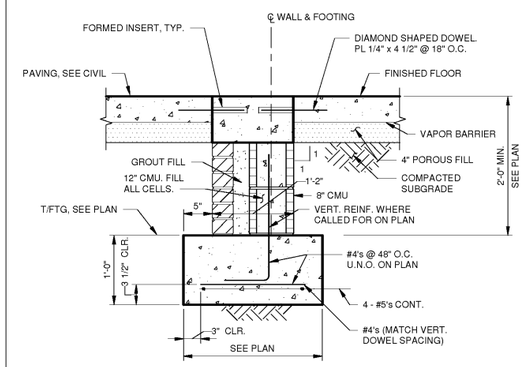

A CONSTRUCTION JOINT RESULTS WHEN CONCRETE IS PLACED ON ONLY ONE SIDE OF THE JOINT TO END A DAY'S PLACEMENT OR TO ACCOMMODATE A DELAY IN PLACING SEQUENCE.

NOTE: DEPTH TO TOP OF FOOTING SHALL BE COORDINATED TO PERMIT PLUMBING TO PASS OVER FOOTING.

3 S-301 **SECTION**
SCALE: 1" = 1'-0"

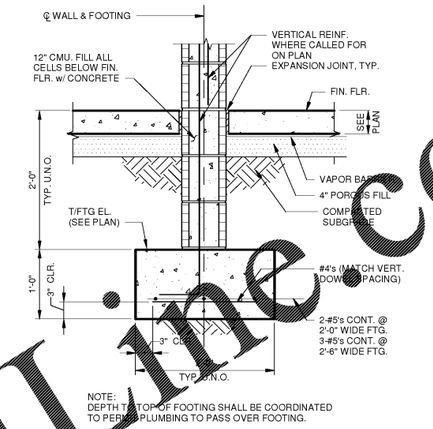

NOTE:
DEPTH TO TOP OF FOOTING SHALL BE COORDINATED TO PERMIT PLUMBING TO PASS OVER FOOTING.

4 S-301 **SECTION**
SCALE: 1" = 1'-0"

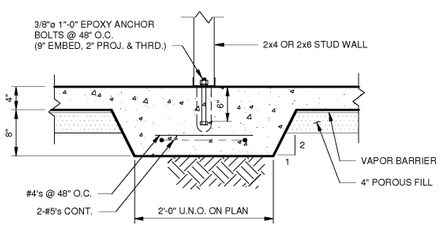

5 S-301 **DETAIL**
SCALE: 1" = 1'-0"

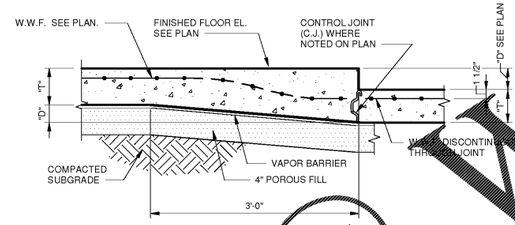

6 S-301 **SECTION**
SCALE: 1" = 1'-0"

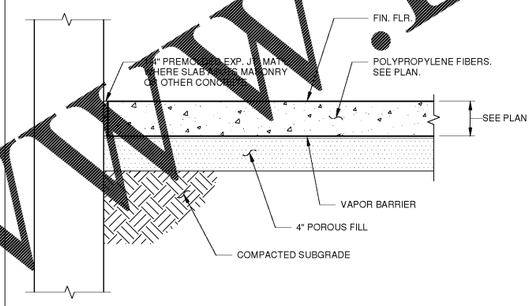

7 S-301 **SECTION**
SCALE: 1 1/2" = 1'-0"

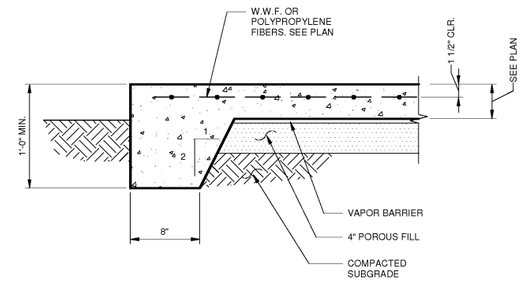

11 S-301 **SECTION**
SCALE: 1 1/2" = 1'-0"

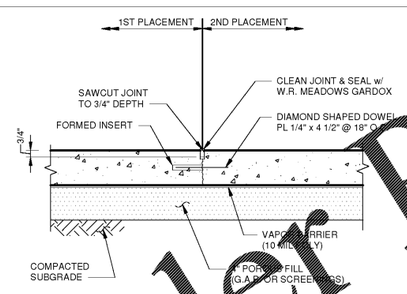

A CONSTRUCTION JOINT RESULTS WHEN CONCRETE IS PLACED ON ONLY ONE SIDE OF THE JOINT TO END A DAY'S PLACEMENT OR TO ACCOMMODATE A DELAY IN PLACING SEQUENCE.

(CONSTRUCTION JOINT AND ALL CONTROL JOINTS IN TRUCK BAYS)

8 S-301 **SECTION**
SCALE: 1 1/2" = 1'-0"

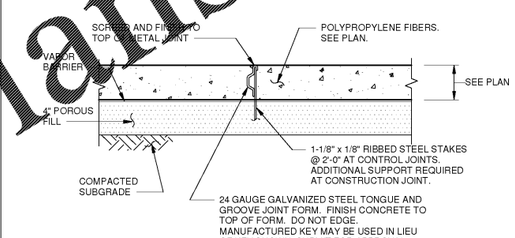

NOTES:

1. A CONSTRUCTION JOINT RESULTS WHEN CONCRETE IS PLACED ONLY ONE SIDE OF THE JOINT TO END A DAY'S "PLACEMENT" OR TO ACCOMMODATE A DELAY IN PLACING SEQUENCE. KEY SHALL BE REMOVED BEFORE CONTINUING FUTURE SLAB PLACEMENT.
2. WHEN CONCRETE IS PLACED ON BOTH SIDES A CONTROL JOINT IS FORMED. CONTROL JOINTS MAY BE SAW CUT TO A MINIMUM DEPTH OF "T"/4 AT CONTRACTORS OPTION. W.W.F. SHALL BE DISCONTINUOUS ACROSS SAW CUT JOINT.

SLABS LESS THAN 6" THICK

9 S-301 **DETAIL**
SCALE: 1 1/2" = 1'-0"

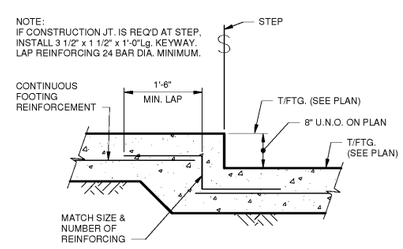

10 S-301 **DETAIL**
SCALE: 3/4" = 1'-0"

JOHNSON, LASCHOBER & ASSOCIATES, P.C.
TF (706)724-5756 • TEL (843) 619-4656
FAX (706)724-3953
WWW.THEJLAGROUP.COM

CLIENT:
AUGUSTA, GA
535 TELFAIR STREET, AUGUSTA, GA 30901

PROJECT NAME:
FIRESTATION #3

PROJECT LOCATION:
2649 GORDON HWY., AUGUSTA, GA 30909

REV	DATE	BY	DESCRIPTION
0	12/21/18	MWL	ISSUED FOR BID

PROJECT NO.	3042.1604
DRAWN BY:	CB
CHECKED BY:	MWL
DATE:	10/08/18
SHEET TITLE:	**CONCRETE SECTIONS AND DETAILS**
SCALE	AS NOTED
DRAWING NO.	**S-301**
REV.	0

This document is the property of Johnson, Laschober & Associates, P.C. The unauthorized reproduction, copying or otherwise use of this document is strictly prohibited and any infringement thereupon may be subject to legal action.

C:\Users\brucker-JLA ENGINEERS\Documents\3042\1604_3_Structural_Central_brucker.rvt
12/21/2018 1:57:24 PM

Order Plans @ WWW.LDIL.ine.com