Order Plans @ www.LDILine.com

1. COMPLY WITH THE NATIONAL ELECTRIC CODE, STATE AND LOCAL CODES.
2. PORTIONS OF WALLS AND ARCHITECTURAL FEATURES MAY HAVE BEEN OMITTED FROM THIS PLAN FOR CLARITY OF ELECTRICAL FEATURES. REFER TO ARCHITECTURAL DRAWINGS FOR EXACT LOCATION OF WALLS AND FIXTURES, AND DIMENSIONS.
3. VERIFY FIELD DIMENSIONS. COORDINATE WORK WITH OTHER TRADES TO AVOID INTERFERENCES.
4. LOCATIONS OF FIXTURES AND EQUIPMENT ON DRAWINGS ARE APPROXIMATE ONLY. OFFSET AS REQUIRED OR AS REQUESTED BY OWNER.
5. ALL RACEWAY EXPOSED ON EXTERIOR SHALL BE RIGID GALVANIZED STEEL. EMT SHALL NOT BE ACCEPTABLE.
6. ALL EXIT AND EMERGENCY LIGHTS SHALL BE CONNECTED TO THE CIRCUIT SERVING THE GENERAL LIGHTING IN THE SAME AREA AND SHALL BE UNSWITCHED. EXHAUST FANS SHALL BE SWITCHED WITH LIGHTS UNLESS SPECIFICALLY INDICATED OTHERWISE.
7. ALL ELECTRICAL PANELS SHALL HAVE ENGRAVED LAMINATED (BLACK ON WHITE) LABELS IDENTIFYING THEM AS INDICATED ON DRAWINGS.
8. INSTALL A MINIMUM OF 6 EMPTY 3/4" CONDUITS WITH PULL WIRES UP FROM EACH RECESSED LIGHTING PANEL TO ABOVE THE CEILING SPACE.
9. COLOR OF WIRING DEVICES AND PLATES SHALL BE AS SELECTED BY ARCHITECT.
10. COORDINATE EXACT LOCATION OF FLOOR OUTLETS WITH ARCHITECT.
11. FLEXIBLE RACEWAY CONNECTIONS TO LIGHT FIXTURES SHALL BE LIMITED TO 72" IN LENGTH. FLEXIBLE RACEWAY CONNECTIONS TO MOTORS AND EQUIPMENT SHALL BE LIMITED TO 36" IN LENGTH.
12. CAREFULLY REVIEW SPECIFICATION SECTION 16100-C REGARDING REQUIREMENTS FOR ISOLATED GROUND SYSTEMS.
13. CONDUCTOR SIZES INDICATED ON THE DRAWINGS HAVE BEEN SELECTED TO PROVIDE FOR ACCEPTABLE VOLTAGE DROP. DO NOT REDUCE WIRE SIZES SHOWN WITHOUT CONSENT OF ENGINEER.
14. INSURE THAT INSULATION BATTS ARE KEPT AT LEAST 4" FROM RECESSED LIGHT FIXTURES.
15. ADJUST DOWNLIGHT REFLECTORS FOR OPTIMUM LIGHT DISTRIBUTION AT DIFFERENT MOUNTING HEIGHTS.
16. SEE SITE PLAN FOR EXTERIOR LIGHTING AND WIRING.
17. INSURE THAT ALL PENETRATIONS OF FIRE WALLS AND DECKS ARE PROPERLY SEALED PER ICC, APPLICABLE UL ASSEMBLIES, AND SPECIFICATIONS.
18. ALL COMPONENTS USED IN PLENUM SPACES SHALL BE CONSTRUCTED OF NON-COMBUSTIBLE MATERIAL.
19. MATERIALS AND ALL COMPONENTS THEREOF SHALL BE NEW AND SHALL BE UL APPROVED WHERE A STANDARD HAS BEEN ESTABLISHED. COMPONENTS SHALL BE EQUAL TO THOSE SCHEDULED ON DRAWINGS.
20. OUTLET, JUNCTION, AND PULL BOXES SHALL BE GALVANIZED STEEL, CODE GAUGE SIZE. THE LOCATION OF OUTLETS AND EQUIPMENT SHOWN ON THE DRAWINGS ARE APPROXIMATE AND THE OWNER SHALL HAVE THE RIGHT TO RELOCATE ANY OUTLETS OR FIXTURES BEFORE THEY ARE INSTALLED WITHOUT ANY ADDITIONAL COST.
21. FIRE ALARM SIGNAL CIRCUIT WIRING SHALL BE POWER LIMITED CABLE CONSISTING OF 2 #14 WITH RED JACKET, UL LISTED FOR THE USE SPECIFIED. ALL FIRE ALARM CIRCUITING SHALL BE INSTALLED IN METALLIC CONDUIT.
22. COORDINATE LAYOUT CAREFULLY WITH SYSTEMS FURNITURE AND MILLWORK SHOP DRAWINGS PRIOR TO ROUGHING IN POWER AND COMMUNICATIONS OUTLETS TO INSURE PROPER ORIENTATION OF OUTLETS WITH COMPONENTS OF THESE SYSTEMS.
23. AVOID PENETRATING OUTER SKIN OF METAL BUILDING WALL AND ROOF. MOUNT EQUIPMENT ON STRUCTURAL COLUMNS AND PURLINS WHERE POSSIBLE. PROVIDE MOUNTING STRUT BETWEEN STRUCTURAL MEMBERS WHERE NECESSARY. FOR ANY UNAVOIDABLE ROOF PENETRATION, INSURE THAT METAL BUILDING MANUFACTURER'S ROOF WARRANTY REQUIREMENTS ARE SATISFIED.
24. OUTLETS FOR SECURITY SYSTEM COMPONENTS SHOWN ON DRAWINGS INDICATE GENERAL AREA OF COMPONENTS ONLY. COORDINATE LAYOUT OF SECURITY SYSTEM RACEWAY CAREFULLY WITH SECURITY SYSTEMS REPRESENTATIVE TO DETERMINE EXACT LOCATION AND CONFIGURATION OF OUTLETS.
25. MATERIALS, EQUIPMENT, AND INSTALLATION SHALL BE GUARANTEED FOR A PERIOD OF ONE (1) YEAR FROM DATE OF ACCEPTANCE. DEFECTS WHICH APPEAR DURING THIS PERIOD SHALL BE CORRECTED AT THE ELECTRICAL CONTRACTOR'S EXPENSE.

GENERAL ELECTRICAL NOTES

A	AMPERES
AFF	ABOVE FINISHED FLOOR
AFG	ABOVE FINISHED GRADE
APCO	ALABAMA POWER COMPANY
AUX	AUXILIARY
BATT	BATTERY CHARGER
C	CONDUIT
CBB	COMPUTER BACKBOARD
CEIL	CEILING
CKT	CIRCUIT
CU	COPPER
EF	ROOM EXHAUST FAN
EMT	ELECTRICAL METALLIC TUBING
EQUIP	EQUIPMENT
EWC	ELECTRIC WATER COOLER
EX.	EXISTING
FLUOR	FLUORESCENT
GFI	GROUND FAULT CIRCUIT INTERRUPTER
GRND	GROUND
HP	HORSEPOWER, HEAT PUMP
HR	HOUR
IG	ISOLATED GROUND
JB	JUNCTION BOX
MAX	MAXIMUM
MB	MAIN BREAKER
MD	MOTORIZED DAMPER
MIN	MINIMUM
MLO	MAIN LUGS ONLY
MTR	METER
NEMA	NATIONAL ELECTRICAL MANUFACTURERS ASSOC.
NIC	NOT IN CONTRACT
NL	NIGHT LIGHT
N.T.S.	NOT TO SCALE
PENE	PENETRATION
PH	PHASE, POWER HOT
RGS	RIGID GALVANIZED STEEL CONDUIT
RM	ROOM
SW	SWITCH
SYS	SYSTEM
TBB	TELEPHONE BACKBOARD
TYP	TYPICAL
V	VOLTS
VER.	VERIFY LOCATION
W	WIRE
WP	WEATHERPROOF
W/	WITH
XFMR	TRANSFORMER
&	AND
#	NUMBER
3R	NEMA 3R WEATHERPROOF ENCLOSURE RATING
4X	NEMA 4X WEATHERPROOF/CORROSION RESISTANT ENCLOSURE RATING
12	NEMA 12 DUSTPROOF ENCLOSURE RATING

ALL ABBREVIATIONS SHOWN MAY NOT BE PRESENT ON DRAWINGS.
REFER TO MECHANICAL DRAWINGS FOR MECHANICAL EQUIPMENT ABBREVIATIONS.

ELECTRICAL ABBREVIATIONS

CONDUCTOR SCHEDULE

CONDUCTORS / CONDUITS SHALL BE SIZED ACCORDING TO THE FOLLOWING CHART UNLESS OTHERWISE NOTED.

CIRCUIT BREAKER	CU PHASE WIRE (AWG)	GROUND WIRE (AWG)	CONDUIT SIZE
15	#12	#12	3/4"
20	#12	#12	3/4"
30	#10	#10	3/4"
40	#8	#10	1"
50	#8	#10	1"
60	#6	#8	1"
70	#6	#8	1"
80	#4	#8	1 1/4"
90	#4	#8	1 1/4"
100	#3	#8	1 1/4"
125	#1	#6	1 1/2"
150	#1/0	#6	2"
175	#2/0	#6	2"
200	#3/0	#6	2"
225	#4/0	#4	2 1/2"
250	#250	#4	3"
400	#500	#3	3 1/2"
500	(2)#250	#2	3 1/2"

NOTES:

1. NEUTRAL CONDUCTOR (IF REQUIRED) SHALL BE THE SAME SIZE AS PHASE CONDUCTORS.
2. ALL LIGHTING CIRCUITS SHALL UTILIZE #10 AWG WIRE FOR VOLTAGE DROPS.
3. ALL HVAC OR OTHER CYCLICAL EQUIPMENT SHALL UTILIZE HACR TYPE CIRCUIT BREAKERS.
4. CONTRACTOR TO PROVIDE QUANTITY OF CONDUCTORS AS NECCESSARY TO POWER LOADS.
5. CONDUIT SIZES BASES ON FOUR CONDUCTORS MAXIMUM. CONTRACTOR SHALL FOLLOW NEC GUIDELINES FOR DERATING AMPACITIES AND CONDUIT SIZES FOR ALL COMBINED CIRCUITS/HOMERUNS.
6. CONDUCTORS SHALL BE COPPER. INDICATED SIZES ARE FOR USE WITH COPPER CONDUCTORS.

A "b" 2	FIXTURE NOTE	TYPE 'A' FIXTURE (SEE FIXTURE SCHEDULE). CIRCUIT NO. 2, CONTROLLED BY SWITCH "b".
2	RECEPTACLE NOTE	WALL OUTLET WITH RECEPTACLE NOTED, CONNECT TO CIRCUIT NO. 2
PPA-5,6	HOME RUN	HOMERUN (TYP) TO PANNEL 'PPA', CONNECT TO CIRCUIT NO.'S "5 & 6"

NOTE:

1. ALL CIRCUITS SHALL CONTAIN A GREEN EQUIPMENT GRND CONDUCTOR.
2. EQUIPMENT GROUND CONDUCTOR SHALL BE AS FOLLOWS UNLESS OTHERWISE INDICATED:
   #12 AWG CIRCUIT – #12 GRND
   #10 AWG CIRCUIT – #10 GRND
   # 8 AWG CIRCUIT – #10 GRND
3. UNLESS OTHERWISE INDICATED, CONDUIT SIZE SHALL BE 3/4" MIN. AND SHALL NOT EXCEED A FILL OF 40% MAXIMUM, SEE NEC.

_#_(PH), _#_(N), & 1#_GRND – _C
OF CIRCUIT CONDUCTORS
SIZE OF CIRCUIT CONDUCTORS "AWG"
OF NEUTRAL CONDUCTORS
SIZE OF CONDUIT
SIZE OF GRND CONDUCTOR "AWG"
SIZE OF NEUTRAL CONDUCTOR "AWG"

CIRCUIT DESIGNATIONS

ELECTRICAL LEGEND

SYMBOL	DESCRIPTION	MTG. HT.
	ABOVEGROUND CONDUIT	
	UNDERGROUND CONDUIT	
	SURFACE MOUNTED FLUORESCENT STRIP.	
	SURFACE OR RECESSED FLUORESCENT FIXTURE (TYPE DETERMINES MOUNTING)	
	SURFACE OR RECESSED FLUORESCENT FIXTURE WITH BATTERY PACK (TYPE DETERMINES MOUNTING)	
	WALL MOUNTED EXTERIOR LIGHT, METAL HALIDE OR COMPACT FLUORESCENT	
	EXIT LIGHT WITH INTEGRAL BATTERY BACK-UP	
	PANEL, LIGHTING OR POWER AS SPECIFIED IN PANEL SCHEDULE.	
S	SINGLE POLE SWITCH, 277V.	FIELD VERIFY
S_3	THREE WAY SWITCH, 277V.	FIELD VERIFY
S	MOTION SENSOR SWITCH, 277V.	FIELD VERIFY
	120V. DUPLEX RECEPTACLE	FIELD VERIFY
	120V. DUPLEX RECEPTACLE – SPECIAL MOUNTING HEIGHT	FIELD VERIFY
	250V. 2-POLE SINGLE RECEPTACLE, AMPERAGE AS NOTED	FIELD VERIFY
GFI	120V. DUPLEX GFI RECEPTACLE	FIELD VERIFY
GFI	120V. DUPLEX GFI RECEPTACLE – SPECIAL MOUNTING HEIGHT	ABOVE COUNTER
	120V. QUADRUPLEX RECEPTACLE	
J	JUNCTION BOX	
	FUSED DISCONNECT SPECIFY AMP/POLE	
	NON-FUSED DISCONNECT SPECIFY AMP/POLE	
T	CONTROL OUTLET VERIFY BOX TYPE & LOCATION W/ MECHANICAL CONTRACTOR. MECHANICAL DWGS FOR EXACT LOCATION.	
PC	PHOTOCELL – FACE NORTH ON ROOF	
	PHONE/DATA CONNECTION	

NOTE:
FOLLOW ALL MOUNTING HEIGHTS THAT ARE DICTATED IN SCHEDULE UNLESS NOTED OTHERWISE ON DRAWINGS.

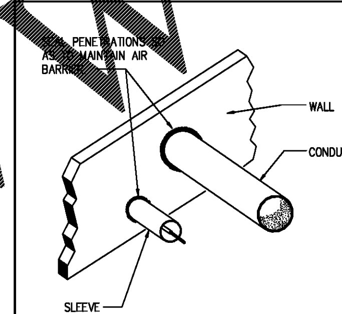

TYPICAL - WALL PENETRATION 1

WIRE LEGEND:

- (A) - 3 PARALLEL RUNS - 4#500KCMIL, 4"C (RHW)
- (B) - 2 PARALLEL RUNS - 4#600KCMIL, 1#3/0(G), 5"C (THWN)
- (C) - 4#250, 1#2 (G), 3"C (THWN)

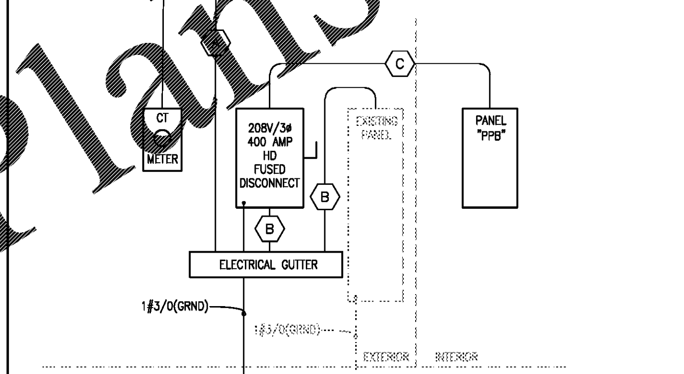

SINGLE LINE DIAGRAM 2

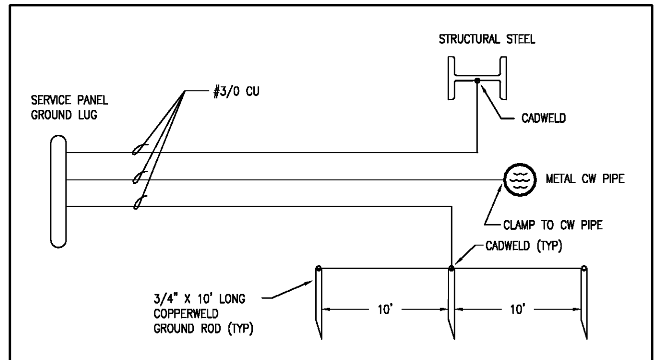

SERVICE GROUNDING ELECTRODE (TYP) 3

SENTELL ENGINEERING
CIVIL . STRUCTURAL . ENVIRONMENTAL . SURVEYING
639 Black Bears Way Phone (205) 752-5364
Tuscaloosa, AL 35401 www.sentell.net

ALABAMA LICENSED NO. 24738 PROFESSIONAL ENGINEER MICAH D. ROBBINS 11/29/18

BRIGHTON COMMUNITY CENTER

BLOCK 17 OF OAKDALE SURVEY, MAP BOOK 2, PAGE XX
SECTION 27, TOWNSHIP 18 SOUTH, RANGE 4 WEST
JEFFERSON COUNTY, ALABAMA

NO.	DATE:	DESCRIPTION:

VERIFY SCALES
BAR IS ONE INCH ON ORIGINAL DWG.
IF NOT ONE INCH ON THIS SHEET ADJUST SCALE ACCORDINGLY

ROBBINS Engineering Company, LLC
Mechanical & Electrical
5945 Knight Ave, Suite B Tuscaloosa, Alabama 35405
Phone: (205) 391-7065
http://www.re-engineers.com
Permit Drawings REC Project# 18092

ELECTRICAL GENERAL NOTES, LEGENDS, AND SCHEDULES
DATE : 11-29-18
JOB NO : 18-119
SHEET : E100