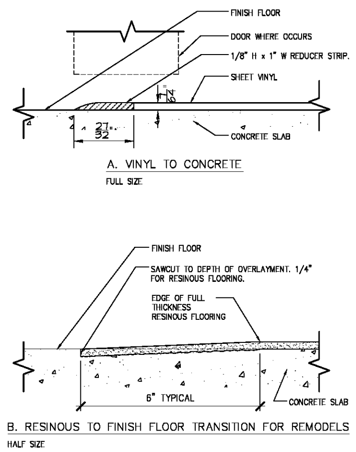

NOTE:
REFER TO SPECIFICATIONS SECTION 09 65 13.
ORIGINAL ISSUE DATE 11/10/11

TRANSITION DETAILS	DATE: 7/13/16 SCALE: NONE DRAWN: ZAW
MASTER SPECIFICATION DRAWING	ASD-4B

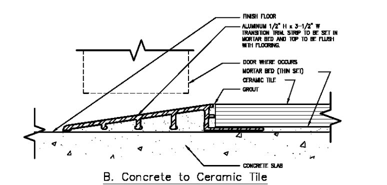

Note:
REFER TO SPECIFICATIONS FOR PRODUCTS.

TILE TRANSITION DETAILS	DATE: 9/10/15 SCALE: NONE DRAWN: ZAW
MASTER SPECIFICATION DRAWING	ASD-4C

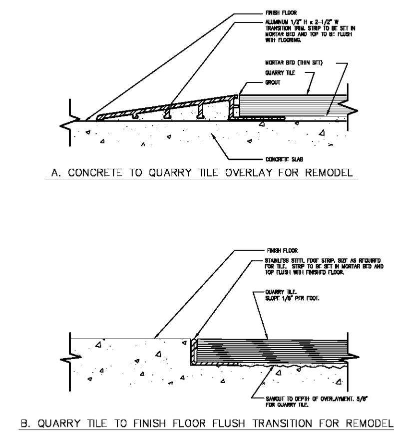

Note:
REFER TO SPECIFICATIONS FOR PRODUCTS.
ORIGINAL ISSUE DATE 11/10/11

QUARRY TILE TRANSITION DETAILS	DATE: 7/29/13 SCALE: NONE DRAWN: ZAW
MASTER SPECIFICATION DRAWING	ASD-4D

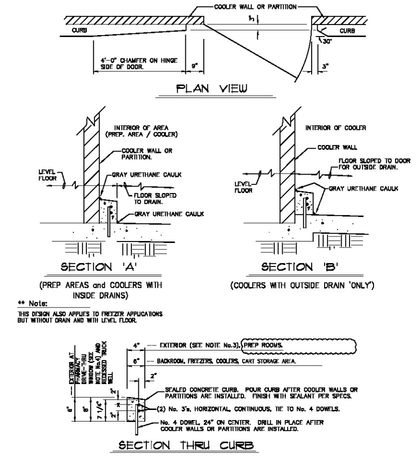

GENERAL NOTES:

1. PROVIDE A SMOOTH FINISH ON ALL CONCRETE CURB SURFACES.
2. ONLY LOCATE CURBS IN AREAS SUBJECT TO EQUIPMENT OPERATIONAL DAMAGE. DO NOT LOCATE CURBS BEHIND TABLES, EQUIPMENT, ETC. REFER TO ARCHITECTURAL PLANS TO COORDINATE CURB LOCATIONS WITH FIXTURE PLAN.
3. EXTERIOR APPLICATIONS ONLY – FILL FIRST COURSE OF BLOCKS WITH CONCRETE AND PROVIDE WEEP DRAINS ABOVE
4. EXCEPTION – 6" HIGH CURB ALONG EXTERIOR WALL AT PHARMACY DRIVE-THRU WINDOW. LINE OF PAVEMENT DROPPED 6" BELOW INSIDE FINISHED FLOOR.

POURED CONCRETE CURB DETAIL (FOR AREAS WITHOUT FLOOR FINISH)	DATE: [illegible] SCALE: NONE DRAWN: ZAW
MASTER SPECIFICATION DRAWING	ASD-6

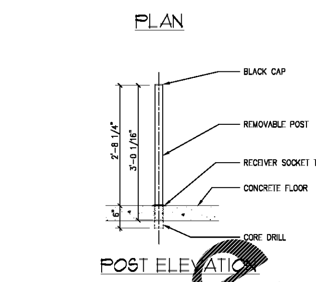

INSTALLATION INSTRUCTIONS:
CORE DRILL 2 3/4" DIAMETER HOLE 6" MIN. DEEP, DEPENDING UPON THE SIZE OF THE CORE DRILLED HOLE. POUR A SMALL AMOUNT OF EPOXY IN THE HOLE. THEN INSERT SOCKET, FILLING IN WITH EPOXY AS NEEDED. INSERT POST IN TO SOCKET AND PROP UP IN VERTICAL POSITION UNTIL EPOXY SETS. IF A LARGER DIAMETER HOLE IS MADE (MAXIMUM 3") POUR STONE MAY BE USED TO SECURE SOCKET IN PLACE

Note:
Installation Instructions From National Cart Co. For NATIONAL CART 5050004 REMOVABLE POST.

REMOVABLE PROTECTIVE POST INSTALLATION	DATE: 5/24/16 SCALE: NONE DRAWN: ZAW
MASTER SPECIFICATION DRAWING	ASD-19

TYPICAL LOCATIONS:
- WASH DOWN AREAS
- PREP. AREAS AT WALLS WITHOUT CURBS

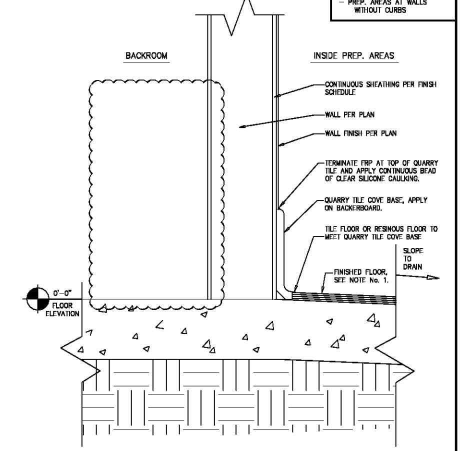

NOTES:
1. FINISHED FLOOR WILL VARY DEPENDING ON APPLICATION — CONCRETE, RESINOUS or TILING.

WALL TO FLOOR BASE TYPE-C	DATE: 8/22/16 SCALE: NONE DRAWN: ZAW
MASTER SPECIFICATION DRAWING	ASD-51C

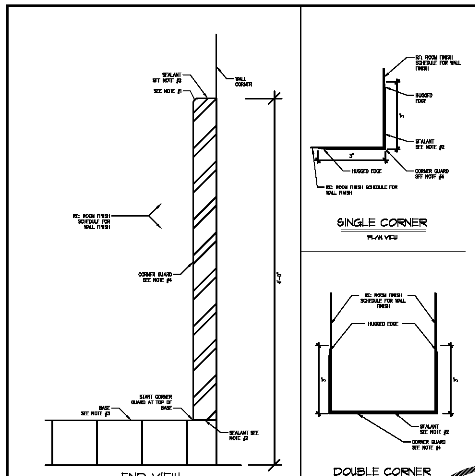

NOTICE:
1. REMOVE ALL SHARP CORNERS.
2. ADHERE STAINLESS STEEL TO WALL WITH CLEAR SILICONE SEALANT, TOP AND BOTTOM.
3. REFERENCE ROOM FINISH SCHEDULE FOR BASE TYPE TO BE USED.
4. 20 GA, 304 STAINLESS STEEL CORNER GUARD.

STAINLESS STEEL CORNER GUARD	DATE: 7/29/13 SCALE: NONE DRAWN: ZAW
MASTER SPECIFICATION DRAWING	ASD-53A

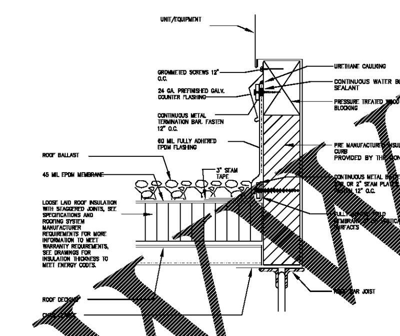

NOTES:
1) PREFABRICATED INSULATED EQUIPMENT ROOF CURB.
2) WHERE BASE FLASHING CAN BE EXTENDED OVER THE TOP OF THE CURB, NEW COUNTER FLASHING WILL NOT BE REQUIRED.
3) CURBS ARE TO BE A MINIMUM 8" FLASHING HEIGHT ABOVE THE FINISHED ROOF SURFACE.

Notice:
This Detail to be used in compliance with Kroger Limited Warranty.

BALLASTED EPDM ROOF CURB DETAIL	DATE: 4/23/13 SCALE: NONE DRAWN: ZAW
MASTER SPECIFICATION DRAWING	ASD-65C

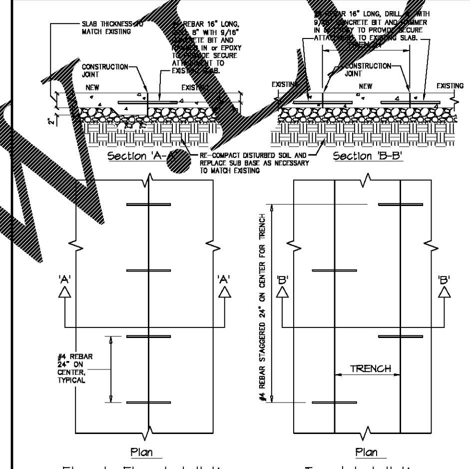

Notes:
IF ANY SIDE OF TRENCH IS 1'-0" or LESS, AWAY FROM CONTROL JOINT or CONSTRUCTION JOINT, SAWCUT AND REMOVE SLAB TO THE JOINT.
DO NOT CROSS CUT.

CONCRETE FLOOR REPLACEMENT AT EXISTING SLAB	DATE: 11/10/11 SCALE: NONE DRAWN: ZAW
MASTER SPECIFICATION DRAWING	ASD-69

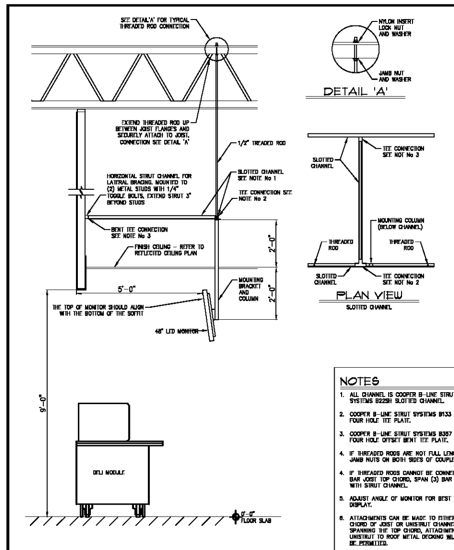

NOTES
1. ALL CHANNEL IS COOPER B-LINE STRUT SYSTEMS B22SH SLOTTED CHANNEL.
2. COOPER B-LINE STRUT SYSTEMS B133 FOUR HOLE TEE PLATE.
3. COOPER B-LINE STRUT SYSTEMS B357 FOUR HOLE OFFSET BENT TEE PLATE.
4. IF THREADED RODS ARE NOT FULL LENGTH USE JAMB NUTS ON BOTH SIDES OF COUPLER.
4. IF THREADED RODS CANNOT BE CONNECTED AT BAR JOIST TOP CHORD, SPAN (3) BAR JOISTS WITH STRUT CHANNEL.
5. ADJUST ANGLE OF MONITOR FOR BEST VIEW OF DISPLAY.
6. ATTACHMENTS CAN BE MADE TO EITHER TOP CHORD OF JOIST OR UNISTRUT CHANNEL SPANNING THE TOP CHORD, ATTACHMENT OF UNISTRUT TO ROOF METAL DECKING WILL NOT BE PERMITTED.

K-0058897 48" MONITOR
K-0053658 MOUNTING KIT

DELI MONITOR MOUNTING	DATE: 9/6/16 SCALE: NONE DRAWN: ZAW
MASTER SPECIFICATION DRAWING	ASD-72

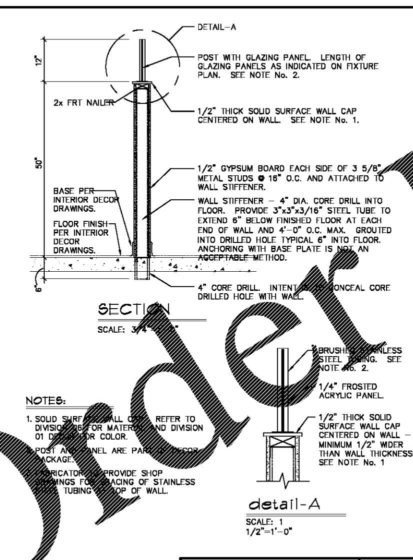

NOTES:
1. SOLID SURFACE WALL CAP. REFER TO DIVISION 06 FOR MATERIAL AND DIVISION 01 DECOR FOR COLOR.
2. POST AND PANEL ARE PART OF DECOR PACKAGE.
3. FABRICATOR TO PROVIDE SHOP DRAWINGS FOR SPACING OF STAINLESS STEEL TUBING AT TOP OF WALL.

ORIGINAL ISSUE DATE 11/10/16

SUSHI-DELI SEATING AREA LOW WALL	DATE: 3/24/17 SCALE: NONE DRAWN: ZAW
MASTER SPECIFICATION DRAWING	ASD-73A

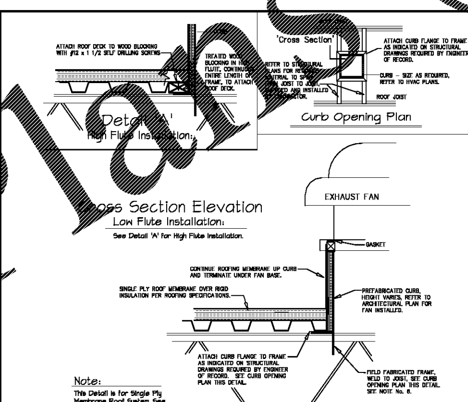

Note:
This Detail is for Single Ply Membrane Roof System, See Note No. 1.

NOTES:
1. REFERENCE ROOFING DETAILS ASD-64C, ASD-65C & ASD-66C FOR ROOF FLASHING.
2. TWO SIDE OF CURB SHALL BE SUPPORTED BY FRAME, NO ADDITIONAL STEEL SUPPORT REQUIRED.
3. SEE KROGER STANDARD SPECIFICATIONS FOR ADDITIONAL INFORMATION.
4. FOR SEISMIC OR OTHER STRUCTURAL CONCERNS PROVIDE AND INSTALL ADDITIONAL STEEL STRUCTURE REINFORCEMENT AS INDICATED ON STRUCTURAL DRAWINGS BY ENGINEER OF RECORD.
5. ATTACH CURB TO STRUCTURAL STEEL AS INDICATED ON STRUCTURAL DRAWINGS BY ENGINEER OF RECORD.
6. NEW STORE CONSTRUCTION TO REMAIN UNPAINTED, PAINT TO MATCH EXISTING FOR EXPANSION REMODELS.

– INSTALLATION SEQUENCE:
1. SET STRUCTURAL STEEL JOIST.
2. INSTALL FIELD FABRICATED FRAME.
3. INSTALL FAN CURB.
4. INSTALL STEEL DECK.
5. INSTALL INSULATION AND ROOFING.
6. PAINT STRUCTURAL STEEL & DECK TO MATCH EXISTING FOR EXPANSION REMODELS.

PREFABRICATED FAN CURB	DATE: 11/10/16 SCALE: NONE DRAWN: ZAW
MASTER SPECIFICATION DRAWING	ASD-88

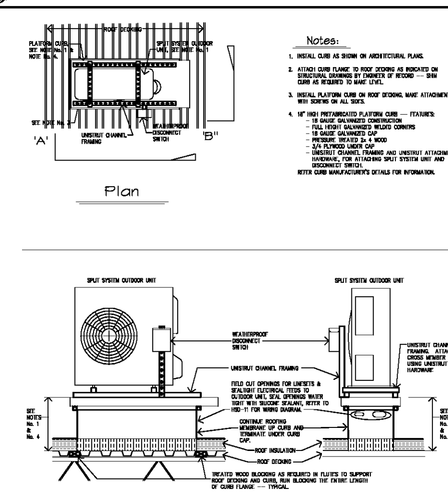

Notes:
1. INSTALL CURB AS SHOWN ON ARCHITECTURAL PLANS.
2. ATTACH CURB FLANGE TO ROOF DECKING AS INDICATED ON STRUCTURAL DRAWINGS BY ENGINEER OF RECORD — SHIM CURB AS REQUIRED TO MAKE LEVEL.
3. INSTALL PLATFORM CURB ON ROOF DECKING, MAKE ATTACHMENTS WITH SCREWS ON ALL SIDES.
4. 18" HIGH PREFABRICATED PLATFORM CURB — FEATURES:
   - 18 GAUGE GALVANIZED CONSTRUCTION
   - FULL HEIGHT GALVANIZED WELDED CORNERS
   - 18 GAUGE GALVANIZED CAP
   - PRESSURE TREATED 2x 4 WOOD
   - 3/4 PLYWOOD UNDER CAP
   - UNISTRUT CHANNEL FRAMING AND UNISTRUT ATTACHMENT HARDWARE, FOR ATTACHING SPLIT SYSTEM UNIT AND DISCONNECT SWITCH.

REFER CURB MANUFACTURER'S DETAILS FOR INFORMATION.

PREFABRICATED NON-STRUCTURAL PLATFORM CURB	DATE: 2/13/17 SCALE: NONE DRAWN: ZAW
MASTER SPECIFICATION DRAWING	ASD-89

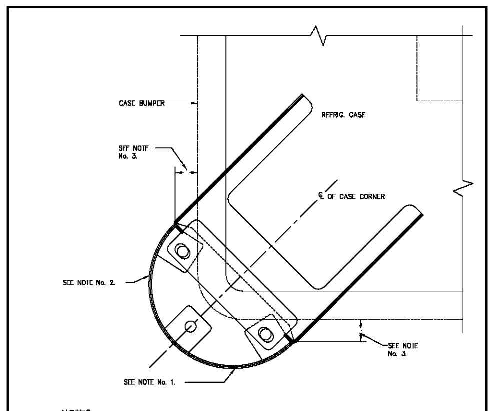

NOTES:
1. DESIGNED FOR USE WITH ISLAND REFRIGERATED CASES (WITH STRAIGHT FRONTS) IN DAIRY, MEAT, SEAFOOD AND DELI DEPARTMENTS. CASE CORNER GUARD. REFER TO SECTION 11 41 13 PARAGRAPH 2.2 B GENERAL STORE FIXTURE INSTALLATION IN SPECIFICATIONS. REFER TO FIXTURE PLAN FOR QUANTITY AND LOCATIONS.
2. CASE CORNER GUARD TO BE INSTALLED, AFTER CASE HAS BEEN SET. INSTALL CASE GUARD (AND FLANGE EXTENSION) AS CLOSE TO CASE AS POSSIBLE PER MANUFACTURER'S INSTALLATION INSTRUCTIONS.
3. MAXIMUM 1" PER MANUFACTURER'S INSTALLATION INSTRUCTIONS.
4. FOR CASES WITH SHALLOW TOE KICK IT MAY BE NECESSARY TO FIELD CUT FLANGE FOR PROPER POSITIONING OF GUARD.

Note:
Detail Based On Installation From National Cart Co. A5050009 (5050009 And 5050010).

REFRIGERATED CASE CORNER GUARD	DATE: 6/5/15 SCALE: NONE DRAWN: ZAW
MASTER SPECIFICATION DRAWING	ASD-160

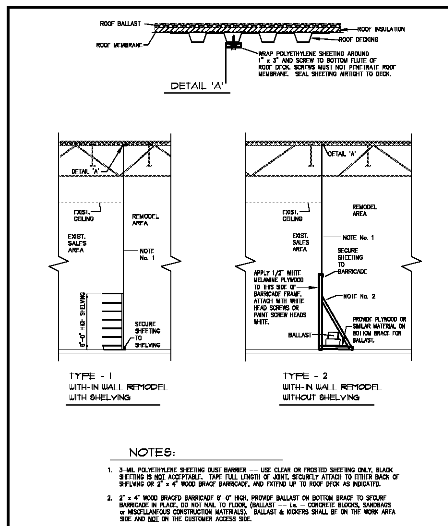

NOTES:
1. 3-MIL POLYETHYLENE SHEETING DUST BARRIER — USE CLEAR OR FROSTED SHEETING ONLY, BLACK SHEETING IS NOT ACCEPTABLE. TAPE FULL LENGTH OF JOINT, SECURELY ATTACH TO EITHER BACK OF SHELVING OR 2" x 4" WOOD BRACE BARRICADE, AND EXTEND UP TO ROOF DECK AS INDICATED.
2. 2" x 4" WOOD BRACED BARRICADE 8'-0" HIGH, PROVIDE BALLAST ON BOTTOM BRACE TO SECURE BARRICADE IN PLACE, DO NOT NAIL TO FLOOR, (BALLAST — i.e. — CONCRETE BLOCKS, SANDBAGS or MISCELLANEOUS CONSTRUCTION MATERIALS). BALLAST & KICKERS SHALL BE ON THE WORK AREA SIDE AND NOT ON THE CUSTOMER ACCESS SIDE.
3. ANY PORTION OF THE SPRINKLER SYSTEM WHICH BECOMES EXPOSED TO POSSIBLE FREEZING TEMPERATURES MUST BE PROTECTED FROM FREEZING WITH HEAT TAPE & INSULATION.

TEMPORARY CONSTRUCTION BARRIERS	DATE: 06-01-07 SCALE: NONE DRAWN: DS/JQ
MASTER SPECIFICATION DETAIL	ASD-162A

D&E DOLLAR & EWERS
ARCHITECTURE, INC.
111 E. Jackson Avenue • Suite 201
Knoxville, Tennessee • 37915
phone: 865-546-1374 • fax: 865-673-9028
e-mail: design@dollar-ewers.com

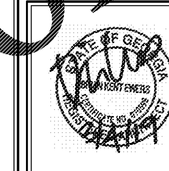

NO.	REVISIONS
△	
△	
△	
△	
△	
△	
△	
△	

A With-in-the-Walls Remodel for:
KROGER STORE #GA-483 SNELLVILLE
1670 STATE HWY 124, SUITE 'F', SNELLVILLE, GEORGIA 30078
ARCHITECTURAL STANDARD DETAILS

COPYRIGHT
ALL DRAWINGS, SPECIFICATIONS AND COPIES THEREOF FURNISHED BY DOLLAR & EWERS ARCHITECTURE, INC. ARE AND SHALL REMAIN THE PROPERTY OF DEA, INC. THEY ARE TO BE USED ONLY WITH RESPECT TO THIS PROJECT PROJECT AND ARE NOT TO BE USED WITH ANY OTHER PROJECT. WITH THE EXCEPTION OF ONE CONTRACT SET FOR EACH PARTY TO THE CONTRACT, SUCH DOCUMENTS ARE TO BE RETURNED OR SUITABLY ACCOUNTED FOR TO DEA, INC. ON REQUEST AT THE COMPLETION OF THE WORK. SUBMISSION DISTRIBUTION TO MEET OFFICIAL REGULATORY REQUIREMENTS OR FOR OTHER PURPOSES IN CONNECTION WITH THE PROJECT IS NOT TO BE CONSTRUED AS PUBLICATION IN DEROGATION DEA'S COMMON LAW COPYRIGHT OR OTHER RESERVED RIGHTS.
COPYRIGHT

ISSUE DATE: MARCH 04, 2019
PROJECT NO.: 219206
SHEET NUMBER: A5.1

Order Plans @ www.LDILine.com