THIS SITE IS WITHIN 1 MILE OF AN IMPAIRED STREAM ACCORDING TO THE SECTION 303d LIST, YELLOW RIVER.
THE BMPS ON THIS PAGE ARE ADDITIONAL BMPS CHOSEN TO FURTHER REDUCE SEDIMENT LOADING TO THIS RIVER.

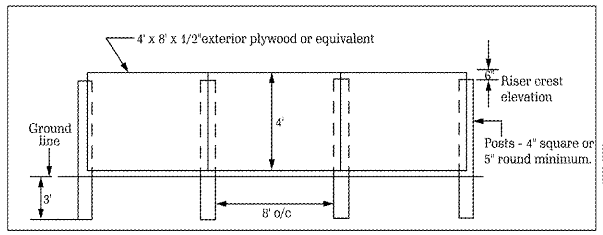

BAFFLE WALLS
FOR SEDIMENT BASIN

STANDARD NOTES:

1. Rigid outlet pipe should be 1.5 to 2 times the height of outlet structure (min. 8').
2. Inlet Orifice size can be reduced with 3" & 4" saddles provided.
3. Minimal assembly required. User provides rigid outlet pipe. All other materials and parts included.
4. Total weight of skimmer ±52.0 lbs.

Water Depth	5" skimmer		5" with 4" Orifice		5" with 3" Orifice	
Ft	cfs	cfd	cfs	cfd	cfs	cfd
0.1	0.1934	16,711	0.1297	11,205	0.1214	10,493
0.3	0.2179	18,829	0.1526	13,188	0.1330	11,494
0.5	0.2456	21,217	0.1798	15,537	0.1457	12,591
1.0	0.2768	23,912	0.2119	18,309	0.1595	13,785
1.5	0.2966	25,625	0.2331	20,138	0.1682	14,536
2.0	0.3117	26,935	0.2496	21,563	0.1747	15,094
2.5	0.3240	27,994	0.2629	22,718	0.1798	15,537
3.0	0.3343	28,879	0.2745	23,719	0.1843	15,922
3.5	0.3434	29,669	0.2848	24,605	0.1881	16,249
4.0	0.3512	30,342	0.2939	25,394	0.1914	16,538
Avg (0.5'-4')	0.3104	26,822	0.2488	21,498	0.1740	15,032

FOR DESIGN PURPOSES ASSUME FLOW RATES REMAIN CONSTANT FOR DEPTHS GREATER THAN 4'. FLOW RATES BASED ON THIRD PARTY TESTING.

USE 3" DIAMETER

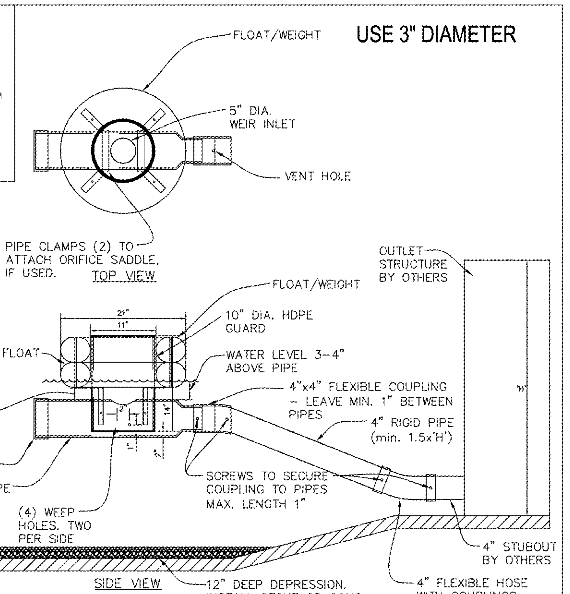

DEVELOPED BY RYMAR WATERWORKS INNOVATIONS, 08/10/18. VALID UNTIL 12/31/18. CHECK WEBSITE FOR UPDATES.

MODEL 2 3" - 5" Marlee Float Skimmer Detail	RYMAR	WEB PAGE WWW.RYMARWATERWORKS.COM	SCALE N.T.S.	PROPERTY LOCATION -----
		PHONE # 1-855-697-9333	DATE 08/13/18	County, State

FLOATING SKIMMER DATA:

1.SEDIMENT STORAGE VOLUME:
TOP LENGTH= 500'
BOTTOM LENGTH= 485'
TOP WIDTH= 45'
BOTTOM WIDTH= 30'

2.TIME TO DRAIN:
MAX = 72 HRS
MIN = 48 HRS

3.SKIMMER DIMENSIONS:
MODEL 2 - 3" ORIFICE SADDLE
CONNECTION PIPE - 4" DIA PVC

4.MANUFACTURER'S NAME
MARLEE FLOAT SKIMMER

Fl-Co

GSWCC 2016 Edition

PURPOSE
To settle suspended sediment, heavy metals and hydrocarbons (TSS) in runoff water from construction sites for water clarification.

CONDITIONS
This standard applies to graded or cleared areas where seedlings may not have a suitable growing season to produce an erosion retardant cover, but can be stabilized with a mulch cover.

Water clarification and the removal of turbidity will usually require the addition of flocculants, polymers, polyacrylamides (PAM), chitosan and other chemicals that cause soil particles to bind together, become heavy and settle to the bottom of a sediment trap, sediment basin or become entrapped in other BMPs. This practice is not intended for application to surface waters of the state. It is intended for application within construction storm water ditches and storm drainages that feed into pre-constructed ponds or basins or other BMPs.

Federal and Local Laws
Fl-Co applications shall comply with all federal, local laws, rules or regulations governing Fl-Co. The operator is responsible for securing applicable required permits, if needed. This standard does not contain the text of the federal or local laws governing Flocculants/ Coagulants.

Planning Considerations
Since settling of flocculated soil particles requires very slow moving (still) water, chemical additives should never be introduced into an outfall BMP where water leaves the property or enters state waters. In all cases where chemical additives are used to reduce turbidity, it is essential to include a sediment basin or sediment trap in process using a "pump and treat" treatment system.

CRITERIA
Application rates shall conform to manufacturer's guidelines for application. Only anionic forms of Fl-Co shall be used. Following are examples of Fl-Co applications within construction storm water ditches or drainageways that feed into sediment basins or other BMPs:

- Fl-Co Bags or Socks that are installed directly in a ditch, pipe or culvert.
- Fl-Co treated ditch checks (i.e. fiber rolls, wattles, or compost logs inoculated or used in conjunction with Fl-Co).
- Granulated Fl-Co treated ditch checks.
- Ditch checks with attached Fl-Co Bags or Socks.
- Addition of granular Fl-Co directly into a ditch.
- Erosion control blankets and turf reinforcement mats that have been inoculated with a Fl-Co .
- "Pump and Treat" systems that use mechanical mixing with a chemical treatment of a Fl-Co.

Operation and Maintenance
Application rates shall conform to manufacturer's guidelines for application. Maintenance shall consist of reapplying Fl-Co via one of means above when turbidity levels are no longer met or the Fl-Co is used up. Bricks, blocks, socks,logs and bags shall be maintained when sediment sediment accumulates on the products.

FLOCCULANTS COAGULANTS - (Fl-Co)

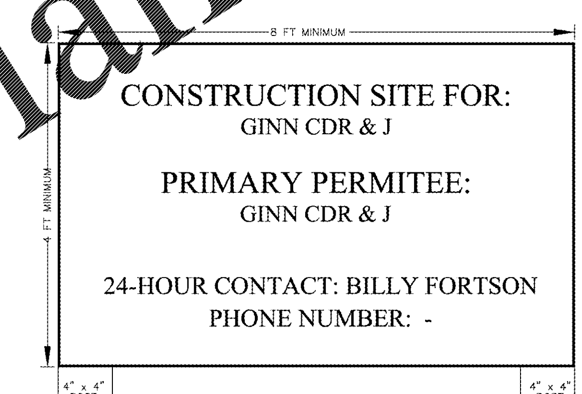

NOTES:
1. THE SIGN SHALL BE DISPLAYED IN A CONSPICUOUS LOCATION, CLEARLY VISIBLE FROM MATHIS AIRPORT ROAD.
2. THE TEXT REFLECTED ON THE ABOVE SIGN DETAIL SHALL BE THE MINIMUM INFORMATION REQUIRED TO BE DISPLAYED ON THE FACE OF THE SIGN.

TMDL SIGN DETAIL

BERMUDA SOD IS CHOSEN IN LIEU OF SEEDING FOR THE ROW OF FAIRVIEW RD. AS THIS CONCENTRATED FLOW DITCH DOES NOT DISCHARGE INTO THE SEDIMENT POND.

SLOPE MATTING IS PROVIDED FOR ALL SLOPES 4H : 1V OR GREATER.
ALL SLOPES ARE LIMITED TO 3H : 1V

EROSION, SEDIMENTATION & POLLUTION CONTROL PLAN CHECKLIST
STAND ALONE CONSTRUCTION PROJECTS

SWCD:______ UPPER OCMULGEE RIVER Region 4
Project Name:______________ Ginn CDR & J   Address:_ Intersection of Access Rd and Fairview Rd
City/County:________________ Covington/Newton County   Date on Plans:_____ 2.15.19
Name & email of person filling out checklist:________ Miriah Sanders (miriah@georgiacivil.com)

TO BE SHOWN ON ES&PC PLAN

Plan Page #	Included Y/N	
C-6.6	Y	1 The applicable Erosion, Sedimentation and Pollution Control Plan Checklist established by the Commission as of January 1 of the year in which the land-disturbing activity was permitted. (The completed Checklist must be submitted with the ES&PC Plan or the Plan will not be reviewed)
C-6.1 thru C-6.6	Y	2 Level II certification number issued by the Commission, signature and seal of the certified design professional. (Signature, seal and Level II number must be on each sheet pertaining to ES&PC plan or the Plan will not be reviewed)
n/a	n/a	3 Limits of disturbance shall be no greater than 50 acres at any one time without prior written authorization from the EPD District Office. If EPD approves the request to disturb 50 acres or more at any one time, the Plan must include at least 4 of the BMPs listed in Appendix 1 of this checklist. * (A copy of the written approval by EPD must be attached to the plan for the Plan to be reviewed.)
All	Y	4 The name and phone number of the 24-hour local contact responsible for erosion, sedimentation and pollution controls.
C-6.1	Y	5 Provide the name, address, **email address**, and phone number of primary permittee.
CV-1.1;C-6.1 thru C-6.4	Y	6 Note total and disturbed acreage of the project or phase under construction.
CV-1.1;C-6.1	Y	7 Provide the GPS location of the construction exit for the site. Give the Latitude and Longitude in decimal degrees.
All	Y	8 Initial date of the Plan and the dates of any revisions made to the Plan including the entity who requested the revisions.
CV-1.1;C-6.1	Y	9 Description of the nature of construction activity.
CV-1.1;C-6.1	Y	10 Provide vicinity map showing site's relation to surrounding areas. Include designation of specific phase, if necessary.
C-6.1	Y	11 Identify the project receiving waters and describe all sensitive adjacent areas including streams, lakes, residential areas, wetlands, marshlands, etc. which may be affected.
C-6.1 thru C-6.4	Y	12 Design professional's certification statement and signature that the site was visited prior to development of the ES&PC Plan as stated on **Part IV page 19** of the permit.
C-6.1 thru C-6.4	Y	13 Design professional's certification statement and signature that the permittee's ES&PC Plan provides for an appropriate and comprehensive system of BMPs and sampling to meet permit requirements as stated on **Part IV page 19** of the permit. *
C-6.1 thru C-6.4		14 Clearly note the statement that "The design professional who prepared the ES&PC Plan is to inspect the installation of the initial sediment storage requirements and perimeter control BMPs within 7 days after installation." In accordance with **Part IV.A.5 page 25** of the permit. *
C-6.1	Y	15 Clearly note the statement that "Non-exempt activities shall not be conducted within the 25 or 50-foot undisturbed stream buffers as measured from the point of wrested vegetation or within 25-feet of the coastal marshland buffer as measured from the Jurisdictional Determination Line without first acquiring the necessary variances and permits."
C-6.2 thru C-6.4	Y	16 Provide a description of any buffer encroachments and indicate whether a buffer variance is required.
C-6.1	Y	17 Clearly note the statement that "Amendments/revisions to the ES&PC Plan which have a significant effect on BMPs with a hydraulic component must be certified by the design professional." *
C-6.1	Y	18 Clearly note the statement that "Waste materials shall not be discharged to waters of the State, except as authorized by a Section 404 permit." *
C-6.1 thru C-6.4	Y	19 Clearly note statement that "The escape of sediment from the site shall be prevented by the installation of erosion and sediment control measures and practices prior to land disturbing activities."
C-6.1 thru C-6.4	Y	20 Clearly note statement that "Erosion control measures will be maintained at all times. If full implementation of the approved Plan does not provide for effective erosion control, additional erosion and sediment control measures shall be implemented to control or treat the sediment source."
C-6.1 thru C-6.4	Y	21 Clearly note the statement "Any disturbed area left exposed for a period greater than 14 days shall be stabilized with mulch or temporary seeding."
C-6.1 thru 6.4	Y	22 Any construction activity which discharges storm water into an Impaired Stream Segment, or within 1 linear mile upstream of and within the same watershed as, any portion of an Biota Impaired Stream Segment must comply with Part III. C. of the permit. Include the completed Appendix 1 listing all the BMPs that will be used for those areas of the site which discharge to the Impaired Stream Segment. *
n/a	n/a	23 If a TMDL Implementation Plan for sediment has been finalized for the Impaired Stream Segment (identified in item 22 above) at least six months prior to submittal of NOI, the ES&PC Plan must address any site-specific conditions or requirements included in the TMDL Implementation Plan. *
C-6.1	Y	24 BMPs for concrete washdown of tools, concrete mixer chutes, hoppers and the rear of the vehicles. Washout of the drum at the construction site is prohibited. *
C-6.1	Y	25 Provide BMPs for the remediation of all petroleum spills and leaks.
C-6.1	Y	26 Description of the measures that will be installed during the construction process to control pollutants in storm water that will occur after construction operations have been completed. *
		27 Description of practices to provide cover for building materials and building products on site. *
C-6.1	Y	28 Description of the practices that will be used to reduce the pollutants in storm water discharges. *
CV-1.1; C-6.1	Y	29 Description and chart or timeline of the intended sequence of major activities which disturb soils for the major portions of the site (i.e., initial perimeter and sediment storage BMPs, clearing and grubbing activities, excavation activities, utility activities, temporary and final stabilization).
C-6.1	Y	30 Provide complete requirements of inspections and record keeping by the primary permittee. *
C-6.1	Y	31 Provide complete requirements of sampling frequency and reporting of sampling results. *
C-6.1	Y	32 Provide complete details for retention of records as per Part IV.F. of the permit. *
C-6.1	Y	33 Description of analytical methods to be used to collect and analyze the samples from each location. *
C-6.5	Y	34 Appendix B rationale for NTU values at all outfall sampling points where applicable. *
C-6.2 thru C-6.4	Y	35 Delineate all sampling locations, perennial and intermittent streams and other water bodies into which storm water is discharged. *
C-6.1	Y	36 A description of appropriate controls and measures that will be implemented at the construction site including: (1) initial sediment storage requirements and perimeter control BMPs, (2) intermediate grading and drainage BMPs, and (3) final BMPs. For construction sites where there will be no mass grading and the initial perimeter control BMPs, intermediate grading and drainage BMPs, and final BMPs are the same, the Plan may combine all of the BMPs into a single phase. *
C-6.2 thru C-6.4	Y	37 Graphic scale and North arrow.
C-6.2 thru C-6.4	Y	38 Existing and proposed contour lines with contour lines drawn at an interval in accordance with the following:
n/a	n/a	39 Use of alternative BMPs whose performance has been documented to be equivalent to or superior to conventional BMPs as certified by a Design Professional (unless disapproved by EPD or the Georgia Soil and Water Conservation Commission). Please refer to the Alternative BMP Guidance Document found at www.gaswcc.org
n/a	n/a	40 Use of alternative BMP for application to the Equivalent BMP List. Please refer to Appendix A-2 of the Manual for Erosion & Sediment Control in Georgia 2016 Edition. *
C-6.2 thru C-6.4	Y	41 Delineation of the applicable 25-foot or 50-foot undisturbed buffers adjacent to state waters and any additional buffers required by the Local Issuing Authority. Clearly note and delineate all areas of impact.
n/a	n/a	42 Delineation of on-site wetlands and all state waters located on and within 200 feet of the project site.
C-6.3	Y	43 Delineation and acreage of contributing drainage basins on the project site.
n/a	n/a	44 Provide hydrology study and maps of drainage basins for both the pre- and post-developed conditions. *
C-6.1	Y	45 An estimate of the runoff coefficient or peak discharge flow of the site prior to and after construction activities are completed.
n/a	n/a	46 Storm-drain pipe and weir velocities with appropriate outlet protection to accommodate discharges without erosion. Identify/Delineate all storm water discharge points.
CV-1.1 and C-6.1	Y	47 Soil series for the project site and their delineation.
C-6.2 thru C-6.4	Y	48 The limits of disturbance for each phase of construction.
C-6.3	Y	49 Provide a minimum of 67 cubic yards of sediment storage per acre drained using a temporary sediment basin, retrofitted detention pond, and/or excavated inlet sediment traps for each common drainage location. Sediment storage volume must be in place prior to and during all land disturbance activities until final stabilization of the site has been achieved. A written justification explaining the decision to use equivalent controls when a sediment basin is not attainable must be included in the Plan for each common drainage location in which a sediment basin is not provided. A written justification as to why 67 cubic yards of storage is not attainable must also be given. Worksheets from the Manual included for structural BMPs and all calculations used by the storage design professional to obtain the required sediment when using equivalent controls. When discharging from sediment basins and impoundments, permittees are required to utilize outlet structures that withdraw water from the surface, unless infeasible. If outlet structures that withdraw water from the surface are not feasible, a written justification explaining this decision must be included in the Plan.
C-6.2 thru C-6.4	Y	50 Location of Best Management Practices that are consistent with and no less stringent than the Manual for Erosion and Sediment Control in Georgia. Use uniform coding symbols from the Manual, Chapter 6, with legend.
C-6.5 thru C-6.6	Y	51 Provide detailed drawings for all structural practices. Specifications must, at a minimum, meet the guidelines set forth in the Manual for Erosion and Sediment Control in Georgia.
C-6.4; C-7.1	Y	52 Provide vegetative plan, noting all temporary and permanent vegetative practices. Include species, planting dates and seeding, fertilizer, lime and mulching rates. Vegetative plan shall be site specific for appropriate time of the year that seeding will take place and for the appropriate geographic region of Georgia.

Map Scale	Ground Slope	Contour Intervals, ft.
1 inch = 100ft or larger scale	Flat 0 - 2%	0.5 or 1
	Rolling 2 - 8%	1 or 2
	Steep 8% +	2.5 or 10

* If using this checklist for a project that is less than 1 acre and not part of a common development but within 200 ft of a perennial stream the * checklist items would be N/A.

georgia civil
CIVIL ENGINEERING
LANDSCAPE ARCHITECTURE
LAND SURVEYING

311 N. Main St., Unit C, Suite 101
P.O. Box 896 | Madison, GA 30650
P: 706.342.1104 | F: 706.342.1105
www.georgiacivil.com

Professional Seal

GEORGIA REGISTERED NO. PE030437 PROFESSIONAL ENGINEER STEPHENS P. OGLESBY

Project Information

GINN CDR&J
0025-041, 0025-042, PORTION OF 0025-042B
ACCESS ROAD - FAIRVIEW ROAD INTERSECTION
COVINGTON, GA
NEWTON COUNTY
CG-GENERAL COMMERCIAL (NEWTON COUNTY)

DRAWING DATE:	2/15/2019
DRAWN BY:	SPO
CHECKED BY:	SPO

REVISIONS

DATE:	DESCRIPTION:

© Copyright 2016 georgia civil, inc.
This document and its reproduction are the property of Georgia Civil, Inc. and may not be reproduced, published, or used in whole or in part without the written consent of Georgia Civil, Inc.

Sheet Title

EROSION, SEDIMENTATION AND POLLUTION CONTROL DETAILS

Sheet Number

C-6.7

Order Plans @ WWW.LDILine.com