Order Plans @ www.LDILine.com

Wall Opening Protective Materials (CLIV, CLIV7)

CLASSIFIED C UL US
Classified by Underwriters Laboratories, Inc. to UL 263 and CAN/ULC-S101

CP617 / CFS-P PA / FIRESTOP BOX INSERT

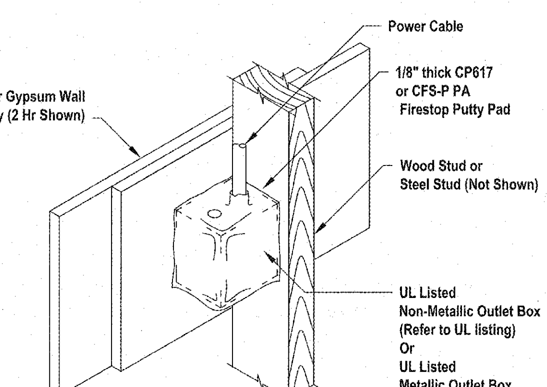

HILTI
Hilti Firestop Systems

Reproduced by HILTI, Inc. Courtesy of Underwriters Laboratories, Inc. December 07, 2016

Page: 1 of 5

System No. W-L-1410

CLASSIFIED C UL US
Classified by Underwriters Laboratories, Inc. to UL 1479 and CAN/ULC-S115

WL 1410

ANSI/UL1479 (ASTM E814)	CAN/ULC S115
F Ratings — 1 and 2 Hr (See Item 1)	F Ratings — 1 and 2 Hr (See Item 1)
T Rating — 0 Hr	FT Rating — 0 Hr
	FH Ratings — 1 and 2 Hr (See Item 1)
	FTH Rating — 0 Hr

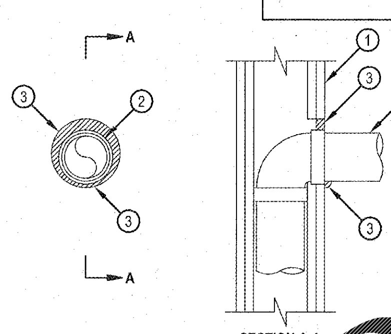

SECTION A-A

1. Wall Assembly — The 1 or 2 hr fire rated gypsum board/stud wall assembly shall be constructed of [illegible] materials a[illegible] the manner [illegible]ified in the individual U300, U400, V400 or W400 Series Wall and Partition Designs in the UL Fire Resistanc[illegible] [illegible]ctory a[illegible] shall include the [illegible] construction features:
   A. Studs — Wall framing may consist of either wood studs or steel channel studs. Wood studs to consis[illegible] nom 2 by 4 in. (51 by 102 mm) lumber spaced 16 in. (406 mm) OC. Steel studs to be min 3-1/2 in. (89 mm) wide and spaced max 24 in [illegible] mm) OC.
   B. Gypsum Board* — One or two layers of nom 5/8 in. (16 mm) thick gypsum bo[illegible]s specified in the indi[illegible] Wall and Partition Design. Max diam of opening is 5 in. (127 mm).
   The hourly F and FH Ratings of the firestop system are equal to the h[illegible] rating of the wall assembly.
2. Through penetrants — One metallic pipe or conduit to be installed either conc[illegible]ally or eccentrically within the firestop system. The annular space shall be 0 in. (point contact) to 1 [illegible]5 mm). Pipe or [illegible] rigidly [illegible]rted on the penetrated side of the wall assembly. The following types and sizes of metallic [illegible] conduits may be used:
   A. Steel pipe — Nom 3 in. (76 mm) diam [illegible]maller) S[illegible] (or heavier) steel [illegible]
   B. Conduit — Nom 3 in. (76 mm) diam (or s[illegible]r) steel [illegible]ctrical metallic t[illegible]ing (E[illegible]), nom 3 in. (76 mm) diam steel conduit or nom 1 in. (25 mm) diam (or smaller) flexible steel conduit.
   C. Copper Tubing — Nom 1 in. (25 [illegible]m) diam ([illegible]aller) T[illegible]er) copper tubing.
   D. Copper Pipe — Nom 1 [illegible] (25 m[illegible]) diam (or sm[illegible]) Regular [illegible]eavier) copper pipe.
3. Fill, Void or Cavity Mater[illegible] — Se[illegible] — Min 5/8 i[illegible]m) thickness of fill material applied within the annulus, flush with surface of wall. Min [illegible]3 mm) dia[illegible] of sealant [illegible]ed at point c[illegible] location.
   HILTI [illegible]RUCTI[illegible]HEMICALS, [illegible] HILTI INC — FS-ONE Sealant, CFS-S-SIL GG Sealant, CP601S Elastomeric Sealant, CP 606 Sealant, [illegible] Putty.
++ Bearing th[illegible] Classific[illegible] Mark

HILTI
Hilti Firestop Systems

Reproduced by HILTI, Inc. Courtesy of Underwriters Laboratories, Inc. January 14, 2014

2/E401 UL DETAILS
NOT TO SCALE

POWER LOAD SUMMARY (KVA)

PANEL	RECEPTACLE LOAD	KITCHEN LOAD	HVAC LOAD	INTERIOR LIGHTING LOAD	EXTERIOR LIGHTING LOAD	MISCELLANEOUS LOADS	TOTAL CONNECTED LOAD
PANEL "A"	-2.22	-16.06	-0.09	-2.78	0.00	-3.38	-24.54
PANEL "B"	2.22	16.06	0.09	2.78	0.00	3.38	24.54
TOTAL CONNECTED LOAD BY EQUIPMENT TYPE	0.00	0.00	0.00	0.00	0.00	0.00	0.00

SERVICE CALCULATION PER NEC 220.88	
TOTAL CONNECTED KVA:	0.00
A: TOTAL CONNECTED KVA =	0.00 KVA
0-200 KVA NOT ALL ELECTRIC RESTAURANT 100% DEMAND FACTOR	
DEMAND KVA:	0.00 KVA
TOTAL DEMAND AMPERES:	0.00 Amps

TOTAL CONNECTED KVA	0.00
TOTAL CONNECTED AMPS	0.00

(2) SETS OF EMPTY 2"C W/PULL STRING PROVIDED UNDER SHELL. EC SHALL EXTEND EXISTING CONDUIT TO NEW LOCATION. VERIFY IN FIELD.

E.C. SHALL VERIFY EXISTING SERVICE MATCHES DESIGN SHOWN. E.C. SHALL VERIFY GROUNDING/BONDING COMPLIES WITH NEC ARTICLE 250. NOTIFY ENGINEER OF ANY CONDITIONS THAT CANNOT BE FIELD CORRECTED.

E.C. SHALL VERIFY WITH LAHJ AND LOCAL UTILITY CONSTRUCTION GUIDELINES TO ENSURE FULL COMPLIANCE WITH ELECTRICAL SERVICE REQUIREMENTS. E.C. SHALL COORDINATE WITH LAHJ AND LOCAL UTILITY AND SHALL BE ASSURED OF LOCAL APPROVAL OF SERVICE DESIGN PRIOR TO PURCHASE OR INSTALLATION OF ANY SERVICE EQUIPMENT. CONTACT THE ENGINEER IMMEDIATELY WITH ANY PROBLEMS OR CHANGES. ANY COSTS ARISING FROM FAILURE TO FULLY COORDINATE SERVICE INSTALLATION AND COMPLY WITH LAHJ AND LOCAL UTILITY SHALL BE BORNE BY THE E.C.

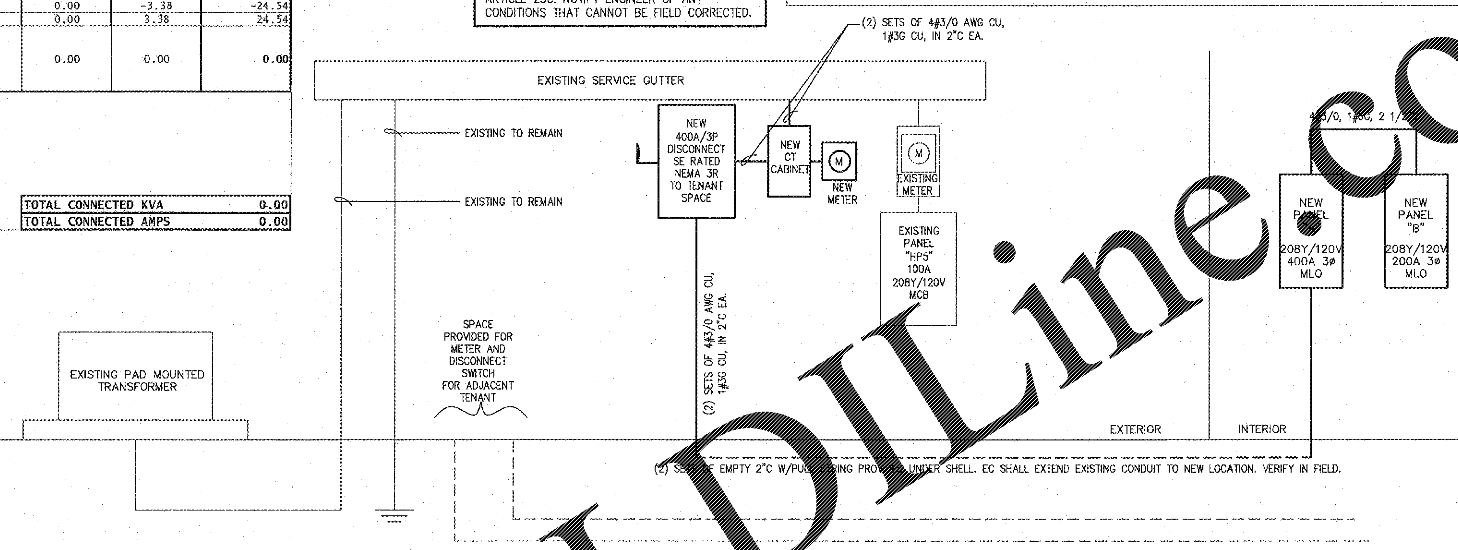

1/E401 RISER DIAGRAM
NOT TO SCALE

PANEL "A"

CKT. #	DESCRIPTION	NOTE	BREAKER POLE	BREAKER AMP.	LOAD (KVA)	A	B	C	LOAD (KVA)	BREAKER AMP.	BREAKER POLE	NOTE	DESCRIPTION	CKT. #
1	RTU-1 FLA: 35.5 MCA: 39.0	1	3	45	4.26	5.4			1.14	20	3	1,2	EF-1 FLA: 9.5	2
3	3#6, #10 G. in (1) 1"C. EA				4.26		5.4		1.14				3#12, [illegible]2 G. in [illegible] 3/4" C. EA	4
5					4.26			5.4	1.14					6
7	RTU-2 FLA: 39.3 MCA: 43	1	3	50	4.72	5.8			1.04	15	3	1,2	EF-[illegible] [illegible]A: 8.7	8
9	3#6, #10 G. in (1) 1"C. EA				4.72		5.8		1.04				3#12, [illegible] in (1[illegible] 3/4" C. EA	10
11					4.72			5.8	1.04					[illegible]
13	RECEPTACLE - HVAC SERVICE		1	20	0.54	1.2			0.71	15	3	[illegible]	EF-1 F[illegible]	14
15	POWERSOAK #P302	7	2	20	0.54		1.2		0.71				[illegible]2, #12 G. in [illegible]/4" C. EA	16
17	2#12, #12 G. in (1) 3/4" C. EA				0.54			1.2	0.71					18
19	GAS GRIDDLES/BASE #E230 E231,E232	5	1	20	0.68	1.7			[illegible].98	20	1	6	GAS [illegible] STATION E[illegible]40	20
21	SHUNT TRIP						0.0						SHUNT [illegible]	22
23	HOOD LTS/CONTROL	4	1	20	1.10			1.9	[illegible]	20	[illegible]	5	WATER BOOS[illegible]R #P350	24
25	LIGHTING CONTROLS		1	20	0.50	0.5							SPACE	26
27	TOUCHBLOCK #E201	5	1	20	0.18		[illegible]		0.[illegible]	[illegible]			REC. TELEPHONE BOARD	28
29	MANAGER WORK STATION		1	20	1.0[illegible]			[illegible].2	1.[illegible]	[illegible]	[illegible]	3	SIGNAGE	30
31	SERVER #E340		1	20	[illegible]	2.6			2.0[illegible]	30	[illegible]	1,2	CU-1 FLA: 17.4	32
33	ROUTER & MODEM		1	20	1.00		3.1		[illegible]				3#10, #10 G. in (1) 3/4" C. EA	34
35	MUSIC SYSTEM		1	20	1.50			3.6	[illegible]					36
37	ATM SYSTEM		[illegible]	20	1.50	[illegible].5				20	1		SPARE	38
39	SECURITY SYSTEM	4	1	[illegible]	1.50		1.5			20	1		SPARE	40
41	SIGNAGE		1	[illegible]	[illegible].20			1.2		20	1		SPARE	42
43	SPACE		1			[illegible].0					1		SPACE	44
45	SPACE		1				0.0				1		SPACE	46
47	SPACE		[illegible]					0.0			1		SPACE	48
49	SPACE		[illegible]			7.[illegible]			7.78	200	3		PANEL 'B'	50
51	SPACE		1				8.7		8.68				4#3/0, #6 G. in (1) 2-1/2" C.	52
53	SPACE		1					8.1	8.08					54
						26.4	26.2	29.4	TOTAL KVA PER PHASE					
						73	73	82	AMPS PER PHASE					

VOLTAGE 20[illegible]/120V
PHASE [illegible]
WIRE [illegible]
MAINS ML[illegible]
RATING 40[illegible] (AMPS)
WITH I.G. [illegible]AR NO[illegible]

MODEL EATON PRL1A
MOUNTING RECESSED
FEEDER SEE RISER
MIN AIC SEE FAULT CALC

ITEMS	CON.	%	DEM.
RECEPTACLES	0.0	code	0.0
KITCHEN	0.0	65%	0.0
HVAC	0.0	100%	0.0
LIGHTS (INT.)	0.0	125%	0.0
LIGHTS (EXT.)	0.0	125%	0.0
MISC.	0.0	100%	0.0
TOTAL KVA	0.0		0.0
TOTAL AMPS	0		0

PANEL "A"

NOTES:
1) PROVIDE HACR TYPE BREAKER.
2) SEE WIRING DIAGRAM ON HOOD SHEETS.
3) PROVIDE LOCKABLE BREAKER. PER NEC 600.6.
4) PROVIDE LOCK-ON BREAKER.
5) GFCI BREAKER.
6) PROVIDE DEAD FRONT GFI SWITCH IN READILY ACCESSIBLE LOCATION
7) PROVIDE LOCKABLE BREAKER. PER NEC 422.31 (B).

PANEL "B"

CKT. #	DESCRIPTION	NOTE	BREAKER POLE	BREAKER AMP.	LOAD (KVA)	A	B	C	LOAD (KVA)	BREAKER AMP.	BREAKER POLE	NOTE	DESCRIPTION	CKT. #
1	PREP LIGHTING		1	20	0.45	1.0			0.52	20	1	2	FOOD PREP TABLE #E260	2
3	DNG RM/SERVICE PENDANTS, RR LTS		1	20	0.40		0.7		0.31	20	1	2	SANDWICH WRAP TABLE #E262	4
5	EF-3		1	15	0.09			0.3	0.24	20	1	2	PRINTER #211	6
7	TRACK LIGHTS/MILKSHAKE LIGHT		1	20	0.63	0.8			0.18	20	1	2,3	GAS WATER HEATER #P330	8
9	KITCHEN LIGHTING		1	20	0.57		0.7		0.17	20	1	3	RECIRCULATION PUMP	10
11	WALK-IN BOX COOLER HEATER/LTS	2	1	20	0.21			0.2			1		SPACE	12
13	FREESTYLE SODA DISPENSER #E110	2	1	20	0.72	1.9			1.20	20	1	2	COUNTER TOP WARMER #E264	14
15	WALK-IN COOLER EVAPORATOR #E360	1	1	20	0.20		1.1		0.90	20	1		SHOW WINDOW RECEPTACLES	16
17	WALK-IN COOLER CONDENSER #E360	1,3	2	20	1.28			1.8	0.50	20	1	2	GREASE HEAT TAPE	18
19	3#12, #12 G. in (1) 3/4" C. EA				1.28	1.3					1		SPACE	20
21	DINING RM LED LIGHTS		1	20	0.72		1.4		0.72	20	1	2	FREESTYLE SODA DISPENSER #E110	22
23	COOKED FRIES STATION #E243	2	1	20	1.08			1.3	0.20	20	1		WIRELESS INTERNET	24
25	MILKSHAKE PRINTER #E211	2	1	20	0.24	1.4			1.16	20	1	1,2,3	ICE MAKER #400	26
27	FOUNTAINETTE #E271	2	1	20	0.47		2.3		1.80	20	1	2	OIL CONTAINMENT TANK #E480	28
29	COOKED FRIES STATION #E243	2	1	20	1.08			1.3	0.24	20	1	2	TEA DISPENSER #E113	30
31	P.O.S. #E210, E211, E212	2	1	20	0.36	0.5			0.18	20	1	2	BUG LIGHT #310	32
33	SPACE		1				0.4		0.36	20	1		DINING RECEPTACLES	34
35	P.O.S. #E210, E211, E212	2	1	20	0.36			1.1	0.75	20	2	2	FREESTYLE ICE MACHINE #E120	36
37	INTERIOR WALL SIGN	5	1	20	0.12	0.9			0.75				2#12, #12 G. in (1) 3/4" C. EA	38
39	SHAKE FREEZER #E270	2	2	20	1.30		2.0		0.75	20	2	2	FREESTYLE ICE MACHINE #E120	40
41	2#12, #12 G. in (1) 3/4" C. EA				1.30			2.0	0.75				2#12, #12 G. in (1) 3/4" C. EA	42
						7.8	8.7	8.1	TOTAL KVA PER PHASE					
						22	24	22	AMPS PER PHASE					

VOLTAGE 208Y/120V
PHASE 3
WIRE 4
MAINS MLO
RATING 200 (AMPS)
WITH I.G. BAR NO

MODEL EATON PRL1A
MOUNTING RECESSED
FEEDER SEE RISER
MIN AIC SEE FAULT CALC

ITEMS	CON.	%	DEM.
RECEPTACLES	2.2	code	2.2
KITCHEN	16.1	65%	10.4
HVAC	0.1	100%	0.1
LIGHTS (INT.)	2.8	125%	3.5
LIGHTS (EXT.)	0.0	125%	0.0
MISC.	3.4	100%	3.4
TOTAL KVA	24.5		19.6
TOTAL AMPS	68		54

PANEL "B"

NOTES:
1) PROVIDE HACR TYPE BREAKER.
2) GFCI BREAKER.
3) PROVIDE LOCKABLE BREAKER. PER NEC 422.31 (B).
4) PROVIDE TYPE C BREAKER.
5) PROVIDE LOCKABLE BREAKER. PER NEC 600.6.

FAULT CURRENT CALCULATIONS

Basic Assumptions:

Transformer	Utility Xfmr
Rating	300 KVA
Secondary	208 V
Impedance	2.0%
SCA-end	41,637 A

Short circuit current through each cable segment:

From	To	Parallel	Length	Voltage	Wire Size	Wire Type	Conduit Type	C*	SCA-beg	SCA-end
Utility Xfmr	WIRING THOUGH	2 Sets	35 ft	208 V	#600	Cu	NonMetallic	28033	41,637 A	34,229 A
WIRING THOUGH	CT CABINET	2 Sets	2 ft	208 V	#3/0	Cu	Metallic	12844	34,229 A	33,486 A
CT CABINET	DISCONNECT	2 Sets	3 ft	208 V	#3/0	Cu	Metallic	12844	33,486 A	32,430 A
DISCONNECT	PANEL A	2 Sets	65 ft	208 V	#3/0	Cu	Metallic	12844	32,430 A	19,265 A
PANEL A	PANEL B	1 Sets	5 ft	208 V	#3/0	Cu	Metallic	12844	19,265 A	18,133 A

* Constant is calculated as: 1 divided by square root of impedance times 1,000 (Impedance values from IEEE Std 241-1990 page 420)

FAULT CURRENT CALCULATION NOTES:

EC SHALL PROVIDE A TESTED SERIES RATED DISTRIBUTION SYSTEM CAPABLE OF WITHSTANDING THE ACTUAL AVAILABLE FAULT CURRENT. AT THE TIME OF DESIGN THE TRANSFORMER SPECIFICATIONS AND LOCATION WERE NOT KNOWN. THESE CALCULATIONS REPRESENT A WORST CASE ESTIMATE BASED ON AN INFINITE BUS DESIGN. EC SHALL ONLY USE THESE CALCULATIONS AS A GUIDELINE FOR THE PROPER SELECTION AND COORDINATION OF BREAKERS. ACTUAL VALUES WILL VARY ACCORDING TO NUMEROUS VARIABLES. VALUES ARE VALID ONLY FOR A 300kVA TRANSFORMER WITH AN IMPEDANCE OF 2.00% OR GREATER AND SERVICE LATERALS NOT LESS THAN 40 FEET IN TOTAL LENGTH. EC SHALL FIELD VERIFY TRANSFORMER RATINGS AND LOCATION AND ALL CONDUCTOR VARIABLES PRIOR TO PURCHASING BREAKERS. ADJUST AS REQUIRED. CONSULT DESIGN ENGINEER AS NEEDED.

GENERAL NOTES

1. ALL INTERIOR METAL PIPING (WATER AND GAS) SHALL BE BONDED TO THE SERVICE ENTRANCE ENCLOSURE, THE GROUNDED CONDUCTOR AT THE SERVICE, THE GROUNDING ELECTRODE CONDUCTOR OF SUFFICIENT SIZE OR TO ONE OR MORE GROUNDING ELECTRODES USED. THE BONDING JUMPER SHALL BE SIZED IN ACCORDANCE WITH TABLE 250.66 (FOR WATER). THE GAS PIPING SHALL BE BONDED WITH A JUMPER SIZED PER TABLE 250.122 USING THE RATING OF THE CIRCUIT THAT MAY ENERGIZE THE PIPING.
2. CIRCUIT BREAKERS SHALL BE RATED TO WITHSTAND THE MAXIMUM AVAILABLE FAULT CURRENT AT THE SITE AS DETERMINED BY THE LOCAL ELECTRIC UTILITY. SWITCHGEAR PROVIDER SHALL COORDINATE WITH LOCAL UTILITY TO DETERMINE MAXIMUM AVAILABLE FAULT CURRENT.
3. E.C. TO CONFIRM WITH ELECTRIC COMPANY THE NEED FOR CT CABINET.
4. ELECTRICAL CONTRACTOR SHALL PROVIDE A DIRECTORY, COMPLETELY TYPED TO IDENTIFY CIRCUITS, WITH TRANSPARENT PROTECTOR FOR EACH PANEL.
5. ANY DEVIATIONS FROM THE DESIGN PLANS SHALL ONLY BE PERFORMED IF APPROVED BY THE OWNER'S REPRESENTATIVE, THE DESIGN ENGINEER, AND THE LOCAL INSPECTOR. ALL WORK SHALL MEET OR EXCEED THE MINIMUM REQUIREMENTS OF ALL APPLICABLE CODES AND STANDARDS. HOWEVER, ANY DEVIATION FROM THE DESIGN PLANS IMPLIED BY LOCAL CODES THAT SUGGESTS INSTALLATION OF LESS THAN THE REQUIREMENTS SPECIFIED IN THE DESIGN PLANS SHALL NOT BE ALLOWED WITHOUT APPROVAL BY THE OWNER'S REPRESENTATIVE OR THE DESIGN ENGINEER. ANY UNAPPROVED DEVIATIONS FROM DESIGN SHALL BE CORRECTED AT THE CONTRACTOR'S EXPENSE. ALL WORK SHALL BE PERFORMED BY A LICENSED CONTRACTOR, CONTRACTOR SHALL INSTALL SYSTEMS, EQUIPMENT AND COMPONENTS IN ACCORDANCE WITH MINIMUM REQUIREMENTS SHOWN IN THESE PLANS.
6. E.C. SHALL VERIFY ELECTRICAL REQUIREMENTS OF ALL EQUIPMENT W/ NAMEPLATE DATA PRIOR TO INSTALLATION. MATCH RECEPTACLES, PLUGS AND CORD EXTENSIONS AS REQUIRED. PROVIDE DISCONNECT TO MATCH EQUIPMENT WHERE REQUIRED.
7. E.C SHALL PROVIDE ALL ELECTRICAL PANELS WITH ARC-FLASH WARNING LABELS PER NEC 110.16.
8. E.C. TO PROVIDE AND INSTALL PLACARDS ON EACH PANEL INDICATING PANEL'S SOURCE, INCLUDING PANEL NAME AND FEEDER CIRCUIT NUMBER. E.C. TO PROVIDE AND INSTALL PANEL MAP.
9. CIRCUIT BREAKERS FOR MULTI-CONDUCTOR CIRCUITS SHALL HAVE A COMMON TRIP FOR ALL CONDUCTORS.
10. PANEL PLACARDS ARE TO BE MADE FROM LAMINATED PLASTIC PROVIDING A BLACK BACKGROUND TO WHITE ENGRAVED LETTERING.

LMHT Project No. 18187

THIS DRAWING IS THE PROPERTY OF THE ARCHITECT AND MAY NOT BE REPRODUCED OR USED WITHOUT HIS WRITTEN PERMISSION

NRD nation restaurant designers
ARCHITECTS & ENGINEERS
3005 Carrington Mill Blvd. Suite 150 Morrisville, NC
ph: 919 544 7251 fax: 919 544 9399
A Division of LMHT Associates

GEORGIA REGISTERED PROFESSIONAL ENGINEER No. 025[illegible]4 NELSON RAY THORNTON JR.

PROJECT: *FIVE GUYS BURGERS & FRIES*
630 CRANE CREEK DRIVE
AUGUSTA, GA, 30907

DRAWING: ELECTRICAL RISER AND PANEL SCHEDULES

Revisions

REVISION DATE

PROJECT DATE 12.3.18

Drawn By JP

Checked By CTT

Sheet No. E401