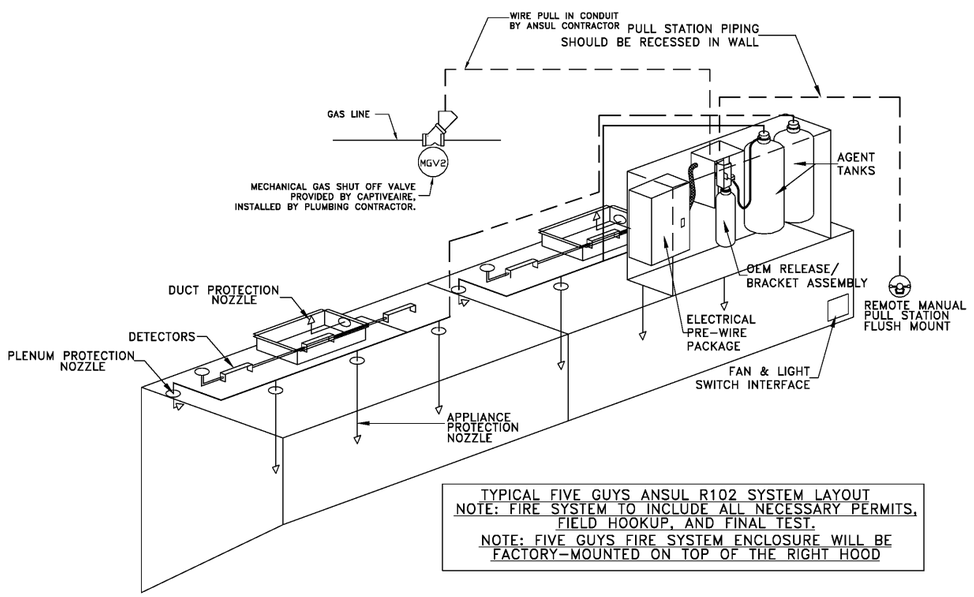

TYPICAL FIVE GUYS ANSUL R102 SYSTEM LAYOUT
NOTE: FIRE SYSTEM TO INCLUDE ALL NECESSARY PERMITS, FIELD HOOKUP, AND FINAL TEST.
NOTE: FIVE GUYS FIRE SYSTEM ENCLOSURE WILL BE FACTORY-MOUNTED ON TOP OF THE RIGHT HOOD

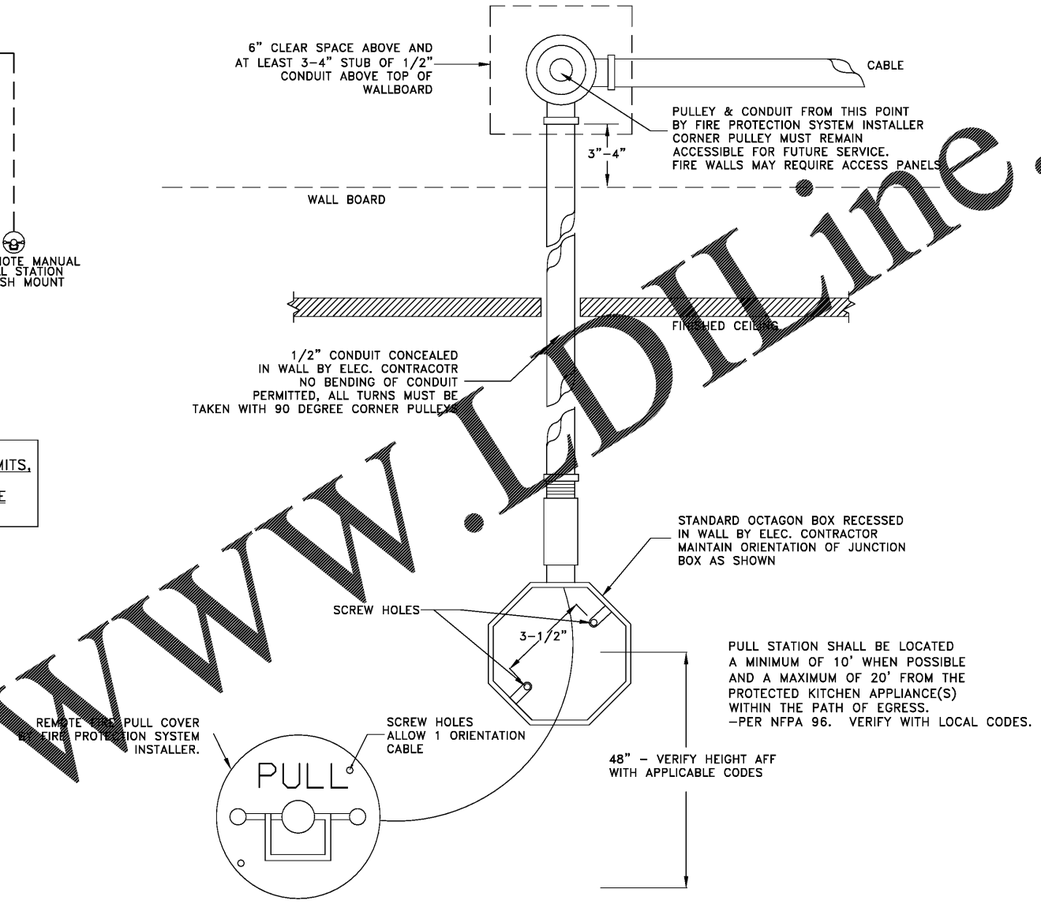

RECESSED REMOTE FIRE PROTECTION PULL STATION DETAIL

BOX AND CONDUIT INSTALLED & SECURED BY ELECTRICAL TRADE
FIRE SYSTEM INSTALLATION TO BE BY AUTHORIZED ANSUL DISTRIBUTOR

THIS DRAWING IS PROVIDED FOR REFERENCE ONLY. HOOD CONTRACTOR SHALL SELECT AND CERTIFY ALL EXHAUST/M.U. AIR FANS. ALL SYSTEMS SHALL MEET ALL APPLICABLE REQUIREMENTS OF STATE AND LOCAL CODES AND OTHER REQUIREMENTS AS SHOWN IN DESIGN DRAWINGS.

Order Plans @ www.LDILine.com

REVISIONS

DESCRIPTION	DATE:
△	
△	
△	
△	

CAPTIVEAIRE
MARYLAND OFFICE
2221 Kansas Ave, Silver Spring, MD, 20910 PHONE: (800) 988-0881 FAX: (919) 227-5931 EMAIL: reg32@captiveaire.com

Five Guys
Augusta, GA
Falls Church, VA 22042

DATE: 8/30/2016
DWG.#: 2760948
DRAWN BY: SDC-32
SCALE: NOT TO SCALE
MASTER DRAWING
SHEET NO. 2

LMHT Project No. 16202

THIS DRAWING IS THE PROPERTY OF THE ARCHITECT AND MAY NOT BE REPRODUCED OR USED WITHOUT THE WRITTEN PERMISSION

LMHT national restaurant designers
ARCHITECTS & ENGINEERS
3005 Carrington Mill Blvd. Suite 150 Morrisville, NC
ph: 919 544 7251 fax: 919 544 9399
A Division of LMHT Associates

SHOP DRAWING FOR REFERENCE ONLY

PROJECT: FIVE GUYS BURGERS & FRIES
8944 J. M. KEYNES DRIVE
CHARLOTTE, NC 28262

DRAWING: HOOD DETAILS

Revisions

REVISION DATE

PROJECT DATE 07.29.2016
Drawn By -
Checked By -
Sheet No. H201