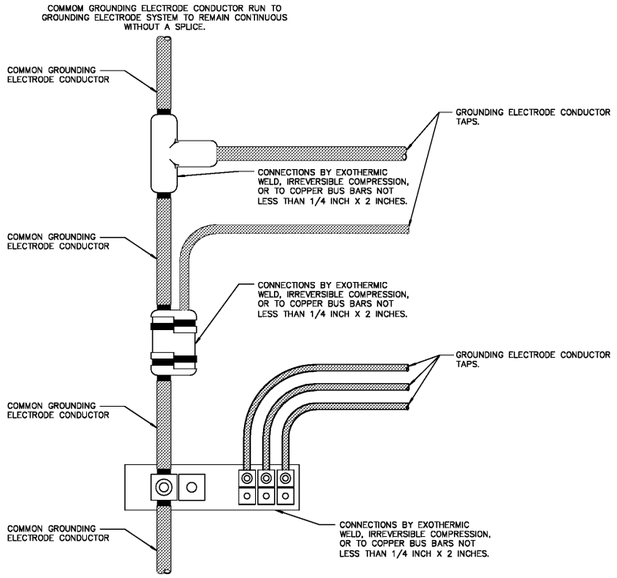

1 E7.1 **GROUNDING CONNECTION DETAIL**
SCALE: N.T.S

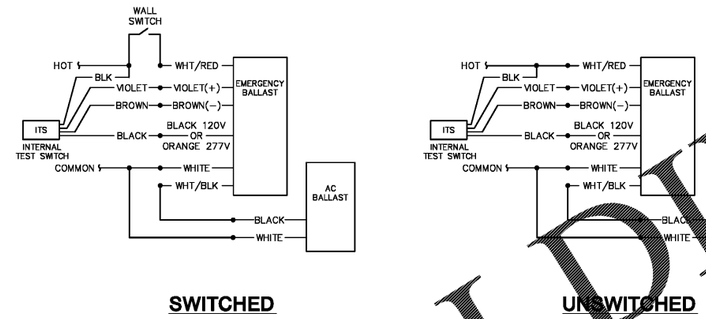

SWITCHED **UNSWITCHED**

2 E7.1 **EMERGENCY BALLAST WIRING DIAGRAM**
SCALE: N.T.S

Order Plans @ WWW.LDILine.com

Phillips Consulting Engineers, LLC
260 Beckenham Walk Drive
Dacula, GA 30019
Office (404)593-0603 Mobile (770)825-6159
www.PhillipsCE.com

© 2019 PRECISION PLANNING, INC. ALL RIGHTS RESERVED.
THESE CONTRACTS, DOCUMENTS AND PERMITS, INCLUDING, IN WHOLE OR IN PART, ARE THE SOLE PROPERTY OF PRECISION PLANNING, INC. UNLESS OTHERWISE AGREED TO THE CONTRACT, NOT TO BE REPRODUCED OR COPIED IN ANY MANNER FOR ANY OTHER PROJECT OTHER THAN THE SPECIFICALLY INDICATED THEREIN WITHOUT WRITTEN PERMISSION FROM AND DUE COMPENSATION TO PRECISION PLANNING, INC.

GEORGIA REGISTERED No. 026946 PROFESSIONAL ENGINEER CHRISTOPHER W. PHILLIPS

STAMP

PRECISION Planning Inc.
planners • engineers • architects • surveyors
400 Pike Boulevard, Lawrenceville, Ga 30046
770.338.8000 • www.ppi.us

GWINNETT COUNTY VOTER REG. AND ELEC. RENOVATION
455 Grayson Highway Suite 200
Lawrenceville, GA 30046

PROJECT

DETAILS

DESIGN	DRAWN	CHECKED
RVG	CAD	PCE

SHEET TITLE

DATE	NO.	DESCRIPTION
02/04/19		RELEASED FOR BID

RELEASE

02-04-19 DATE
A16-137AGSB PROJ. NUMBER
FILE NAME
FILE NUMBER

E7.1

Feb 01, 2019 – 6:52am D:\Dropbox (Phillips Consulting)\Projects\2018\18132 – GC Board of Elections Renov\CAD\E7.1_18132.dwg * E7.1