TYPICAL INSTALLATION GUIDELINES FOR ROLLED EROSION CONTROL PRODUCTS (RECP)

BLANKET AND MATTING CROSS-SECTIONS

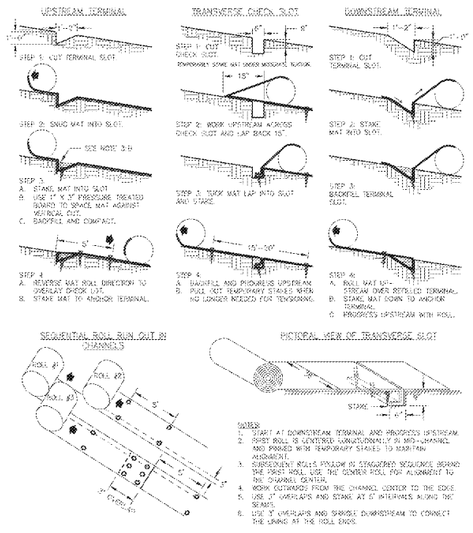

NOTES:
1. START AT DOWNSTREAM TERMINAL AND PROGRESS UPSTREAM. FIRST ROLL IS CENTERED LONGITUDINALLY IN MID-CHANNEL AND PINNED WITH TEMPORARY STAKES TO MAINTAIN ALIGNMENT.
2. SUBSEQUENT ROLLS FOLLOW IN STAGGERED SEQUENCE BEHIND THE FIRST ROLL. USE THE CENTER ROLL FOR ALIGNMENT TO THE CHANNEL CENTER.
3. WORK OUTWARDS FROM THE CHANNEL CENTER TO THE EDGE. USE 3" OVERLAPS AND STAKE AT 5' INTERVALS ALONG THE SEAMS.
4. USE 3" OVERLAPS AND SHINGLE DOWNSTREAM TO CONNECT THE LINING AT THE ROLL ENDS.

Figure 6-10.1 - Typical Installation Guidelines for Matting and Blankets

6-71 GSWCC 2016 Edition

MATTING BLANKETS (Ss) | 1
NOT TO SCALE

CURB INLET FILTER "PIGS IN BLANKET"

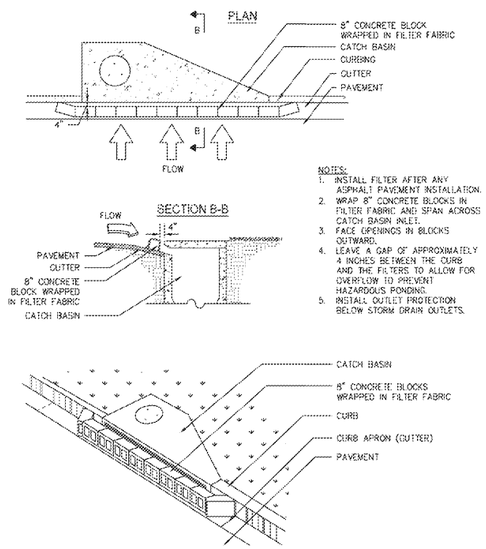

NOTES:
1. INSTALL FILTER AFTER ANY ASPHALT PAVEMENT INSTALLATION.
2. WRAP 8" CONCRETE BLOCKS IN FILTER FABRIC AND SPAN ACROSS CATCH BASIN INLET.
3. FACE OPENINGS IN BLOCKS OUTWARD.
4. LEAVE A GAP OF APPROXIMATELY 4 INCHES BETWEEN THE CURB AND THE FILTERS TO ALLOW FOR OVERFLOW TO PREVENT HAZARDOUS PONDING.
5. INSTALL OUTLET PROTECTION BELOW STORM DRAIN OUTLETS.

Figure 6-28.6 Curb Inlet Filter "Pigs in Blanket"

6-154 GSWCC 2016 Edition

INLET SEDIMENT TRAP - (SD2-P) | 2
NOT TO SCALE

STONE CHECK DAM

CROSS SECTION

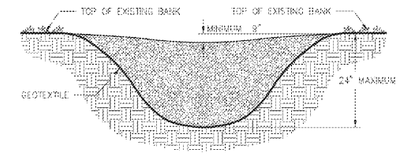

PROFILE VIEW

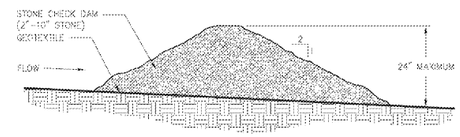

NOTES:
1. CHECK DAMS ARE TO BE USED ONLY IN SMALL OPEN CHANNELS (THEY ARE NOT TO BE USED IN LIVE STREAMS).
2. THE DRAINAGE AREA FOR STONE CHECK DAMS SHALL NOT EXCEED TWO ACRES.
3. THE CENTER OF THE CHECK DAM MUST BE AT LEAST 9 INCHES LOWER THAN THE OUTER EDGES.
4. THE DAM HEIGHT SHOULD BE A MAXIMUM OF 2 FEET FROM GROUND TO RIM EDGE.
5. THE SIDE SLOPES OF THE CHECK DAM SHALL NOT EXCEED A [illegible]
6. GEOTEXTILE SHALL BE USED TO PREVENT THE MITIGATION OF SUBGRADE SOIL PARTICLES INTO THE STONES (REFER TO AASHTO M288-96, SECTION [illegible] TABLE 3).

STONE CHECK DAM

SPACING BETWEEN CHECK DAMS

[illegible] THE [illegible] OF THE UPSTREAM CHECK DAM. [illegible] THE DOWNSTREAM CHECK DAM [illegible] SHOULD SUCH THAT POINTS A AND [illegible] OF EQUAL ELEVATION.

TO BE SHOWN ON THE EROSION AND SEDIMENT CONTROL PLAN

1. [illegible] in the channel/ditch that the check dam is being used in:_____
2. Above 2.0 cfs: Yes_____ No_____
3. If Yes, list BMP being used in conjunction with check dams:_____

REFER TO SHEET C-2.0 FOR CALCULATIONS.

STONE CHECK DAM - (Cd-S) | 3
NOT TO SCALE

TEMPORARY SEDIMENT TRAP

COURTESY OF CITY OF NAPERVILLE BMP EROSION AND SEDIMENT

OVERFLOW

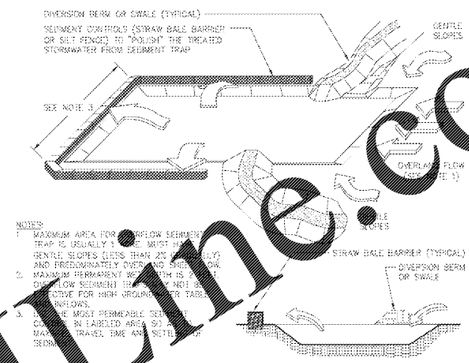

NOTES:
1. MAXIMUM AREA FOR [illegible] OVERFLOW SEDIMENT TRAP IS USUALLY 1 [illegible] MUST [illegible] GENTLE SLOPES (LESS THAN 2% [illegible]) AND PRESUMABLY [illegible] CHECK.
2. MAXIMUM PERMANENT WO[illegible] DEPTH IS [illegible] OVERFLOW SEDIMENT TRAP IS NOT [illegible] EFFECTIVE FOR HIGH GROUND[illegible] TAIL[illegible] BASEFLOWS.
3. [illegible] THE MOST PERMEABLE SO[illegible] DIRECT IN LABELED AREA SO [illegible] MAXIMUM TRAVEL TIME AND DETE[illegible] DEPTH.

Figure 6-30.1

TEMPORARY SEDIMENT TRAP DETAIL (Sd4-A) | 4
NOT TO SCALE

FABRIC AND SUPPORTING FRAME FOR INLET PROTECTION

STEEL FRAME AND SILT FENCE INSTALLATION

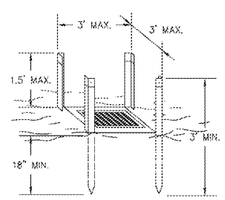

NOTES:
1. DESIGN IS FOR SLOPES NO GREATER THAN 5% (NOT DESIGNED FOR CONCENTRATED FLOWS).
2. THE STEEL POSTS SUPPORTING THE SILT FENCE MATERIAL SHOULD BE SPACED EVENLY AROUND THE PERIMETER OF THE INLET (MAXIMUM OF 3' APART).
3. THE STEEL POSTS SHOULD BE SECURELY DRIVEN AT LEAST 18" DEEP.
4. THE FABRIC SHOULD BE ENTRENCHED AT LEAST 12" AND THEN BACKFILLED WITH CRUSHED STONE OR COMPACTED SOIL.

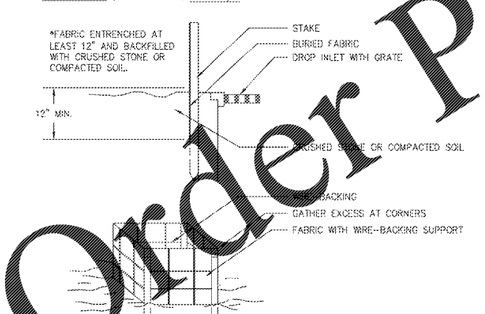

Figure 6-28.1 - Fabric and Supporting Frame For Inlet Projection

GSWCC 2016 Edition 6-202

INLET SEDIMENT TRAP - (SD2-F) | 5
NOT TO SCALE

Dust Control on Disturbed Areas (Du)

DEFINITION

Controlling surface and air movement of dust on construction roads, and demolition sites.

PURPOSE

To prevent surface and air movement of dust from exposed soil surfaces.

To reduce the presence of airborne substances that may be harmful or injurious to human health, welfare, or safety, or to animals or plant life.

CONDITIONS

This practice is applicable to areas subject to surface and air movement of dust where on and off-site damage may occur without treatment.

METHOD AND MATERIALS

A. Temporary Methods

Mulches. See standard **Ds1 - Disturbed Area Stabilization (With Mulching Only)**. Synthetic resins may be used instead of asphalt to bind mulch material. Refer to specification **Tac - Tackifiers**. Resins should be used according to manufacturer's recommendations.

Vegetative Cover. See specification **Ds2 - Disturbed Area Stabilization (With Temporary Seeding)**.

Spray-on Adhesives. These are used on mineral soils (not effective on muck soils). Keep traffic off these areas. Refer to specification **Tac - Tackifiers**.

Tillage. This practice is designed to roughen and bring clods to the surface. It is an emergency measure that should be used during wind erosion starts. Begin plowing on windward side of site. Offset type plows spaced about [illegible] apart, spring toothed harrows, and similar types are examples of equipment that may produce the desired effect.

Irrigation. This is generally done as an emergency treatment. Site is sprinkled with water until the surface is well wet. Repeat as needed.

Barriers. Solid board fences, snowfences, burlap fences, crate walls, bales of hay and similar material can be used to control air currents and soil blowing. Barriers placed at right angles to prevailing currents at intervals of about 15 times their height are effective in controlling wind erosion.

Calcium Chloride. Apply at rate that will keep surface moist. May need retreatment.

B. Permanent Methods

Permanent Vegetation. See specification **Ds3 -Disturbed Area Stabilization (With Permanent Vegetation)**. Existing trees and large shrubs may afford valuable protection if left in place.

Topsoiling. This entails covering the surface with less erosive soil material. See specification **Tp - Topsoiling**.

Stone. Cover surface with crushed stone or coarse gravel. See specification **Cr-Construction Road Stabilization**.

GSWCC 2016 Edition 6-55

DUST CONTROL - (Du) | 6
NOT TO SCALE

Channel Stabilization (Ch)

DEFINITION

Improving, constructing or stabilizing an open channel for water conveyance.

PURPOSE

Open channels are constructed or stabilized to be non-erosive, with no sediment deposition and to provide adequate capacity for flood water, drainage, other water management practices, or any combination thereof.

CONDITIONS

This standard applies to the improvement, construction or stabilization of open channels and existing ditches with drainage areas less than one square mile. This standard applies only to channels conveying intermittent flow, not to channels conveying a continuous, live stream.

An adequate outlet for the modified channel length must be available for discharge by gravity flow. Construction or other improvements of the channel should not adversely affect the environmental integrity of the area and must not cause significant erosion upstream or flooding and/or sediment deposition downstream.

DESIGN CRITERIA

Planning

The alignment and design of channels shall give careful consideration to the preservation of valuable fish and wildlife habitat and items of significant value for wildlife food or shelter or for aesthetic purposes.

Where channel construction will adversely affect significant fish or wildlife habitat, mitigation measures should be included in the plan. Mitigation measures may include pools, riffles, flats, cascades or other similar provisions.

As many trees as possible are to be left inside channel rights-of-way considering the requirements of construction, operation, and maintenance.

Unusually large or attractive trees shall be preserved.

Realignment

The realignment of channels shall be kept to an absolute minimum and should be permitted only to correct an adverse environmental condition.

Channel Capacity

The capacity for open channels shall be determined by procedures applicable to the purpose to be served.

Hydraulic Requirements

Manning's formula shall be used to determine velocities in channels. The "n" values for use in this formula shall be estimated using currently accepted guides along with knowledge and experience regarding the conditions. Acceptable guides can be found in hydrology textbooks.

Channel Cross-Section

The required channel cross-section and grade are determined by the design capacity, the materials in which the channel is to be constructed, and the requirements for maintenance. A minimum depth may be required to provide adequate outlets for subsurface drains and tributary channels.

Channel Stability

All channel construction, improvement and modification shall be in accordance with a design expected to result in a stable channel that can be maintained.

Characteristics of a Stable Channel

1. Aggradation or degradation does not interfere with the function of the channel or affect adjacent areas.
2. The channel banks do not erode to the extent that the channel cross-section is changed appreciably.
3. Excessive sediment bars do not develop.
4. Excessive erosion does not occur around culverts, bridges or elsewhere.
5. Gullies do not form or enlarge due to the entry of uncontrolled surface flow to the channel.
6. The determination of channel stability considers "bankfull" flow. Bankfull flow is defined as flow in the channel that reaches a water surface that is at or near normal ground elevation for a significant length of a channel reach. Excessive channel depth created by cutting through high ground should not be considered in determinations of bankfull flow.

CHANNEL LININGS AND STRUCTURAL MEASURES

Where channel velocities exceed safe velocities for vegetated lining due to increased grade or a change in channel cross-section, or where durability of vegetative lining is adversely affected by seasonal changes, channel lining of rock, concrete or other durable material may be needed. Grade stabilization structures may also be needed.

The following categories for flow velocities shall apply when selecting the channel lining:

Category 1 (less than 5 ft/sec*) (Ch-1)

Vegetated Lining

A vegetated lining may be used to stabilize channels with a velocity of less than five f/s temporary erosion control blankets or sod shall be used on all channels and concentrated flow areas to aid in the establishment of the vegetated lining. Refer to specifications **Ds3 - Disturbed Area Stabilization (With Permanent Vegetation), Ds4 - Disturbed Area Stabilization (With Sodding), and Ss - Slope Stabilization.** Hydraulic Erosion Control Products (HECPs) are not intended to be applied in channels, swales or other areas where concentrated flows are anticipated, unless installed in conjunction with Rolled Erosion Control Products (RECP's).

TO BE SHOWN ON THE EROSION AND SEDIMENT CONTROL PLAN

1. The velocity in the channel, in ft/sec, for when the channel is flowing at the bank-full discharge or 25-year frequency discharge, whichever is the greater.
2. The type of lining to be used to stabilize the channel, i.e. vegetation (Ch-1) indicate type of vegetation and matting or blanket to be used), riprap (Ch-2) indicate average stone size), or concrete (Ch-3).

REFER TO SHEET C-2.0 FOR CALCULATIONS.

CHANNEL STABILIZATION - Ch-1 | 7
NOT TO SCALE

DIVERSION - (DI)

MINIMUM DESIGN FOR DIVERSION RUNOFF

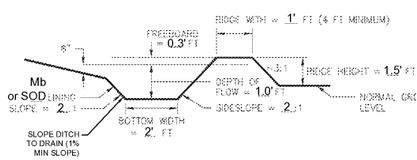

DIVERSION - (DI) | 8
NOT TO SCALE

GSWCC Georgia Soil and Water Conservation Commission

Timothy Kyle Sharpe

Level II Certified Design Professional

Certification Number 0000065749

Issued: 01/17/2015 Expires: 02/17/2021

EROSION CONTROL CERTIFICATION
NOT TO SCALE

PREPARED IN THE OFFICE OF
LeCraw Engineering
© 2018 LeCraw Engineering, Inc.
3475 Corporate Way, Suite A
Duluth, GA 30096
Phone: 678.441.4500
Fax: 770.441.0298
www.lecrawengineering.com
PEF005768

REV #	COUNTY COMMENTS	DATE	DRAWN BY	CHECKED BY
A		08/08/18	FDE	TKS

PROJECT
BOJANGLES' - STOCKBRIDGE
HUDSON BRIDGE ROAD & WILLIS DRIVE
LAND LOT 21, DISTRICT 6, PARCEL 032-01012001
HENRY COUNTY, GA

SEAL:
GEORGIA REGISTERED PROFESSIONAL ENGINEER No. PE036681 TIMOTHY KYLE SHARPE

DESIGN TEAM:

DRAWN BY:	FDE
DESIGNED BY:	FDE
REVIEWED BY:	TKS

GEORGIA811 www.Georgia811.com
Know what's below. Call before you dig.

DETAILS ARE NOT DRAWN TO SCALE

JOB #: 237002
DATE: JULY 30, 2018
EROSION CONTROL DETAILS - 2

C-2.5

Drawing name: L:\237002 - Multiville Properties, LLC - Bojangles' - Stockbridge_GA\CAD\DCONSTR\237002 - 06 - EASC DETAILS.dwg EROSION CONTROL DETAILS - 2 Sep 28, 2018 9:16am by: frank.eubanks

This document, together with the concepts and designs presented herein, as an instrument of service, is intended only for the specific purpose and client for which it was prepared. Reuse of and improper reliance on this document without written authorization and adaptation by LeCraw Engineering, Inc. shall be without liability to LeCraw Engineering, Inc. Copyright LeCraw Engineering, Inc., 2018

Order Plans Online.com