COUNTY OF HENRICO
DEPARTMENT OF PUBLIC UTILITIES

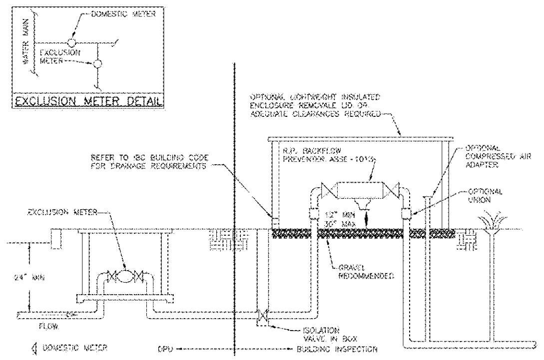

PROCEDURE FOR EXCLUSION METERS WHEN BACKFLOW PREVENTION IS REQUIRED:

1. SUBMIT PLANS TO DEPARTMENT OF PUBLIC UTILITIES (DPU) SEALED AND SIGNED BY A PROFESSIONAL ENGINEER FOR APPROVAL.
2. APPLY FOR A PLUMBING PERMIT FROM COUNTY OF HENRICO, DEPARTMENT OF BUILDING INSPECTIONS.
3. INSTALL PIPING AND BACKFLOW PREVENTER, INCLUDING BRASS MALE TEST COCK ADAPTERS– (4) STRAIGHT HOSE ADAPTER FITTINGS, 1/4" S.A.E. 45 FLARE TUBE x 1/4" NPT. FOR CONNECTION TO TEST DEVICE. BACKFLOW PREVENTION DEVICES WILL BE INSTALLED AT THE WATER SERVICE CONNECTION AFTER THE EXCLUSION METER. REFER TO APPROVED DPU PLANS FOR TYPICAL INSTALLATION DETAILS. NO TAP–INS WILL BE PERMITTED FOR ANY PURPOSE BETWEEN EXCLUSION METER AND BACKFLOW DEVICE.
4. METER BOX AND YOKE IN ACCORDANCE WITH COUNTY OF HENRICO DPU STANDARDS TO BE INSTALLED BY THE CONTRACTOR. THE EXCLUSION METER WILL BE INSTALLED BY THE COUNTY OF HENRICO, DPU.
5. CALL THE BACKFLOW TECHNICIAN AT 727–8708 FOR INSPECTION OF THE BACKFLOW PREVENTER. THE EXCLUSION METER MUST BE PAID FOR AT THE DPU PUBLIC INFORMATION OFFICE BEFORE THE EXCLUSION METER WILL BE INSTALLED. CALL 501–4517 FOR DETAILS.
6. CALL BUILDING INSPECTIONS AT 501–4368 FOR INSPECTION OF ALL PIPING AND PLUMBING WORK DOWNSTREAM OF THE EXCLUSION METER.
7. FREEZE PROTECTION IS REQUIRED. RECOMMENDED OPTIONS ARE: A LIGHTWEIGHT, INSULATED ENCLOSURE, INSTALLATION OF HEAT TAPE, OR PIPING UNIONS TO ALLOW REMOVAL OF DEVICE DURING WINTER MONTHS. ALL METHODS OF FREEZE PROTECTION MUST ALLOW ACCESSIBILITY TO DEVICE FOR TESTING AND REPAIRS.
8. THE OPTIONAL COMPRESSED AIR ADAPTER SHALL BE INSTALLED DOWNSTREAM OF THE REDUCED PRESSURE ZONE BACKFLOW PREVENTER, IF PROVIDED.
9. THE BACKFLOW PREVENTION ASSEMBLY'S SHUTOFF VALVES SHALL BE THE ONES APPROVE BY THE MANUFACTURER FOR THAT BACKFLOW PREVENTION ASSEMBLY.

REVISIONS		DRWG. NO.
06/20/2014	TYPICAL INSTALLATION REDUCED PRESSURE BACKFLOW PREVENTER IRRIGATION SYSTEM WITH EXCLUSION METER	D–415

COUNTY OF HENRICO
DEPARTMENT OF PUBLIC UTILITIES

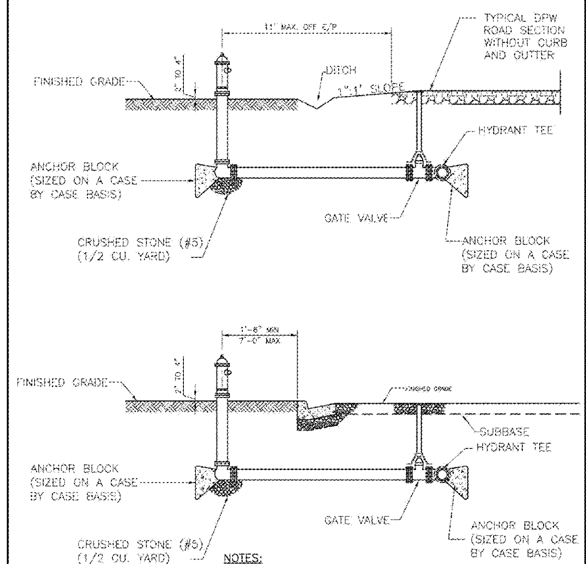

NOTES:

1. USE RESTRAINED JOINTS ON GATE VALVE, FIRE HYDRANT, AND PIPING.
2. DUCTILE IRON PIPE IS REQUIRED FOR ALL FIRE HYDRANT, AND PIPING.
3. HYDRANTS SHALL BE LOCATED A MINIMUM DISTANCE OF 50' FROM ALL STRUCTURES.
4. KEEP WEEP HOLE CLEAR TO ALLOW PROPER DRAINAGE.

REVISIONS		DRWG. NO.
06/20/2014	TYPICAL FIRE HYDRANT DETAIL	D–495–1

COUNTY OF HENRICO
DEPARTMENT OF PUBLIC UTILITIES

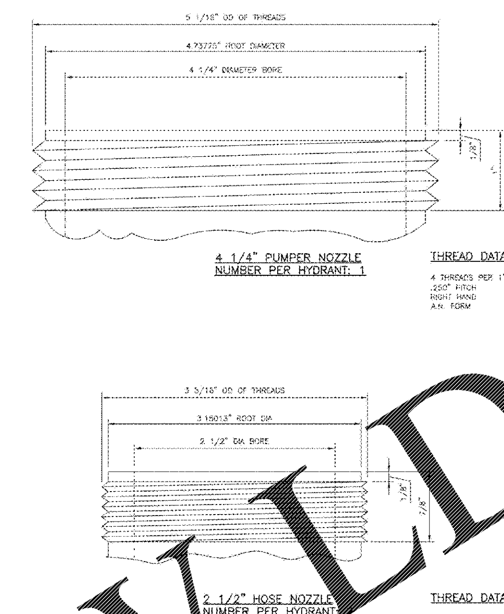

REVISIONS		DRWG. NO.
06/20/2014	CITY OF RICHMOND FIRE HYDRANT NOZZLE THREADS	D–495–2

COUNTY OF HENRICO
DEPARTMENT OF PUBLIC UTILITIES

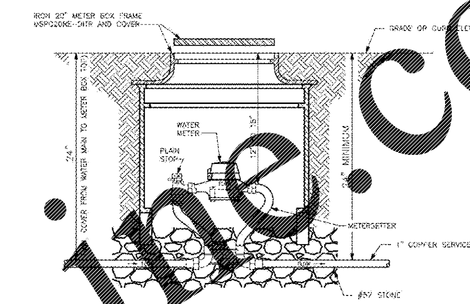

20" ROUND PLASTIC METER BOX SIMILAR TO OLDCASTLE PLASTIC METER BOX HW–0020B

NOTES:

1. ALL WATER METERS TO BE FURNISHED & INSTALLED BY THE COUNTY.
2. ALL METERSETTERS PROVIDED FOR 5/8" AND 1" METERS SHALL HAVE REMOVABLE PACK JOINTS SUITABLE FOR COPPER PIPE.
3. ALL METERSETTERS SHALL HAVE SADDLE NUTS, PADLOCK WINGS, AND SHALL BE SIMILAR TO FORD OR MUELLER.

REVISIONS		DRWG. NO.
06/20/2014	STANDARD METER BOX INSTALLATION FOR 5/8" AND 1" METERS	D–525

COUNTY OF HENRICO
DEPARTMENT OF PUBLIC UTILITIES

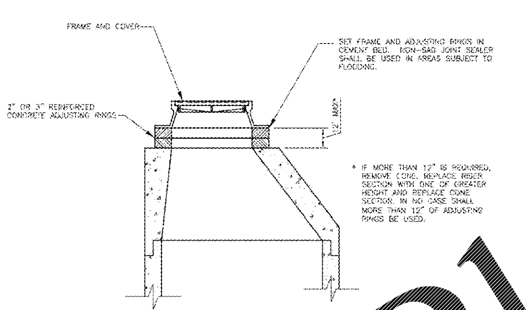

ADJUST EXISTING MANHOLE FRAME & COVER

REVISIONS		DRWG. NO.
06/20/2014	ADJUST EXISTING MANHOLE FRAME AND COVER	D–165

No.	REVISIONS	DATE	BY
1	OIL WATER SEPARATOR REVISIONS	11/07/18	RRP
2	OIL WATER SEPARATOR REVISIONS	01/02/19	RRP
3	UNDERGROUND PIPE CONNECTION REVISIONS	01/03/19	RRP
4	PHASE II E&S REVISIONS	01/14/19	RRP
5	BID SET REVISIONS	01/17/19	RRP

POD# 2018-00101 & 00196

Kimley»Horn

© 2018 KIMLEY–HORN AND ASSOCIATES, INC.
1700 WILLOW LAWN DR, SUITE 200, RICHMOND, VA 23230
PHONE: 804–673–3882
WWW.KIMLEY–HORN.COM

COMMONWEALTH OF VIRGINIA
RYAN R. PERKINS
Lic. No. 046565
11/09/2018
PROFESSIONAL ENGINEER

KHA PROJECT 113160005
DATE 11/09/2018
SCALE AS SHOWN
DESIGNED BY KRW
DRAWN BY KRW
CHECKED BY RRP

UTILITY DETAILS

WAWA AT PARHAM
AND THREE CHOPT
PREPARED FOR
REBKEE CO.
HENRICO COUNTY VIRGINIA

SHEET NUMBER
CU-503

Plotted By: Westwood, Kelsey Sheet Set: Kha Layout: CU-503 UTILITY DETAILS January 17, 2019 04:22:15pm K:\RIC_CIV\113160 - Wawa - Rebkee\005 - Parham and Three Chopt - Henrico\CAD\PlanSheets\CU-501 UTILITY DETAILS.dwg

Order Plans @ WWW.LDILine.com