DI-3A, 3B, 3C

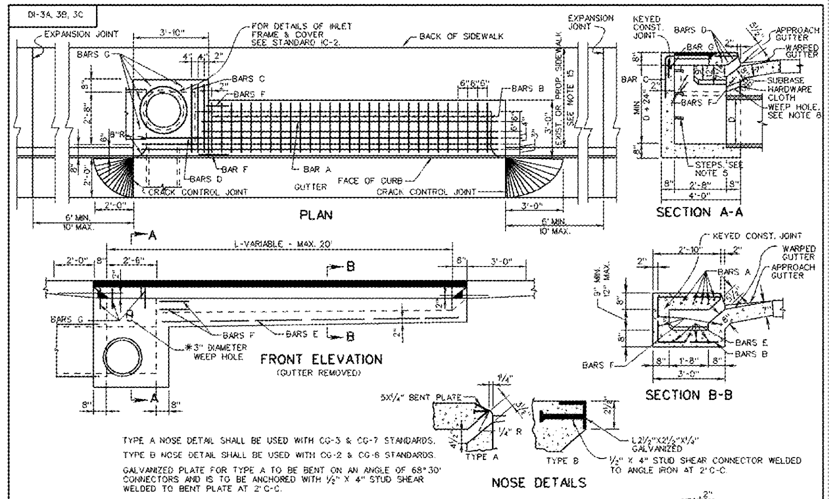

TYPE A NOSE DETAIL SHALL BE USED WITH CG-3 & CG-7 STANDARDS.
TYPE B NOSE DETAIL SHALL BE USED WITH CG-2 & CG-6 STANDARDS.
GALVANIZED PLATE FOR TYPE A TO BE BENT ON AN ANGLE OF 68°30' CONNECTORS AND IS TO BE ANCHORED WITH ½" X 4" STUD SHEAR WELDED TO BENT PLATE AT 2' C-C.

DI-3A — DI-3B: FOR USE ON GRADES — DI-3C: FOR USE IN SAGS BOTH SIDES TO BE SYMMETRICAL

DETAIL WHEN USED ADJACENT TO CURB WITHOUT GUTTER

VDOT ROAD AND BRIDGE STANDARDS — SHEET 1 OF 2 — 104.09 — REVISION DATE 08/10

STANDARD CURB DROP INLET
12" - 30" PIPE: MAXIMUM DEPTH (H) = 8'
VIRGINIA DEPARTMENT OF TRANSPORTATION

SPECIFICATION REFERENCE 233 302

2016 ROAD & BRIDGE STANDARDS

TABLE OF QUANTITIES

DI-3A, 3B, 3C

TYPE	L	AREA OF SLOT	Concrete	BARS A		BARS B		BARS C		BARS D		BARS E		BARS F		BARS G		WEIGHT
	Ft.	Sq. Ft.	Cu. Yds.	No.	Lin. Ft. *	No.	Lin. Ft. *	No.	Lin. Ft. *	No.	Lin. Ft.*	No.	Lin. Ft.*	No.	Lin. Ft.*	No.	Lin. Ft.*	Lbs.
DI-3A	2'-6"	1.15	2.26	-	-	-	-	1	5'-7"	3	3'-2"	-	-	-	-	6	1'-0"	22
DI-3B	4'	1.83	2.59	5	1'-6"	2	6'-7" to 6'-10"	3	5'-7"	3	3'-2"	4	1'-6"	3	1'-6"	4	1'-0"	64
	6'	2.75	3.02	5	3'-6"	6	6'-7" to 6'-10"	3	5'-7"	3	3'-2"	4	3'-6"	3	1'-6"	4	1'-0"	111
	8'	3.67	3.46	5	5'-6"	10	6'-7" to 6'-10"	3	5'-7"	3	3'-2"	4	5'-6"	3	1'-6"	4	1'-0"	158
	10'	4.58	3.90	5	7'-6"	14	6'-7" to 6'-10"	3	5'-7"	3	3'-2"	4	7'-6"	3	1'-6"	4	1'-0"	204
	12'	5.50	4.34	5	9'-6"	18	6'-7" to 6'-10"	3	5'-7"	3	3'-2"	4	9'-6"	3	1'-6"	4	1'-0"	251
	14'	6.42	4.78	5	11'-6"	22	6'-7" to 6'-10"	3	5'-7"	3	3'-2"	4	11'-6"	3	1'-6"	4	1'-0"	298
	16'	7.33	5.22	5	13'-6"	26	6'-7" to 6'-10"	3	5'-7"	3	3'-2"	4	13'-6"	3	1'-6"	4	1'-0"	345
	18'	8.25	5.66	5	15'-6"	30	6'-7" to 6'-10"	3	5'-7"	3	3'-2"	4	15'-6"	3	1'-6"	4	1'-0"	391
	20'	9.17	6.09	5	17'-6"	34	6'-7" to 6'-10"	3	5'-7"	3	3'-2"	4	17'-6"	3	1'-6"	4	1'-0"	438
DI-3C	6'	2.75	3.01	10	1'-9"	4	6'-7" to 6'-10"	5	5'-7"	3	3'-2"	8	1'-9"	6	1'-6"	2	1'-0"	111
	8'	3.67	3.45	10	2'-9"	8	6'-7" to 6'-10"	5	5'-7"	3	3'-2"	8	2'-9"	6	1'-6"	2	1'-0"	158
	10'	4.58	3.89	10	3'-9"	12	6'-7" to 6'-10"	5	5'-7"	3	3'-2"	8	3'-9"	6	1'-6"	2	1'-0"	205
	12'	5.50	4.33	10	4'-9"	16	6'-7" to 6'-10"	5	5'-7"	3	3'-2"	8	4'-9"	6	1'-6"	2	1'-0"	252
	14'	6.42	4.77	10	5'-9"	20	6'-7" to 6'-10"	5	5'-7"	3	3'-2"	8	5'-9"	6	1'-6"	2	1'-0"	298
	16'	7.33	5.21	10	6'-9"	24	6'-7" to 6'-10"	5	5'-7"	3	3'-2"	8	6'-9"	6	1'-6"	2	1'-0"	345
	18'	8.25	5.65	10	7'-9"	28	6'-7" to 6'-10"	5	5'-7"	3	3'-2"	8	7'-9"	6	1'-6"	2	1'-0"	392
	20'	9.17	6.09	10	8'-9"	32	6'-7" to 6'-10"	5	5'-7"	3	3'-2"	8	8'-9"	6	1'-6"	2	1'-0"	439

NOTES

1. DEPTH OF INLET (H) TO BE SHOWN ON PLANS.
2. THE "H" DIMENSION SHOWN ON THE STANDARDS AND SPECIFIED ON THE PLANS WILL BE MEASURED FROM THE INVERT OF THE OUTFALL PIPE TO THE TOP OF THE STRUCTURE. PLAN "H" DIMENSIONS ARE APPROXIMATE ONLY FOR ESTIMATING PURPOSES AND THE ACTUAL DIMENSIONS SHALL BE DETERMINED BY THE CONTRACTOR FROM FIELD CONDITIONS.
3. WHEN SPECIFIED ON THE PLANS THE INVERT IS TO BE SHAPED IN ACCORDANCE WITH STANDARD IS-1. THE COST OF FURNISHING AND PLACING ALL MATERIALS INCIDENTAL TO THE SHAPING IS TO BE INCLUDED IN THE BID PRICE FOR THE STRUCTURE.
4. IN THE EVENT THE INVERT OF THE OUTFALL PIPE IS HIGHER THAN THE BOTTOM OF THE STRUCTURE, THE INVERT OF THE STRUCTURE SHALL BE SHAPED WITH CEMENT MORTAR TO PREVENT STANDING OR PONDING OF WATER IN THE STRUCTURE. THE COST OF FURNISHING AND PLACING ALL MATERIALS INCIDENTAL TO THE SHAPING IS TO BE INCLUDED IN THE BID PRICE FOR THE STRUCTURE.
5. STEPS ARE TO BE PROVIDED WHEN H IS 4'-0" OR GREATER. FOR DETAILS SEE STANDARD ST-1.
6. THIS ITEM MAY BE PRECAST OR CAST-IN-PLACE.
7. #4 X 8" SMOOTH DOWELS AT APPROXIMATELY 12" C-C TO BE PLACED IN ALL AREAS ADJACENT TO ABUTTING CONCRETE TO PREVENT SETTLEMENT.
8. 3" DIAMETER WEEP HOLE TO BE LOCATED TO DRAIN SUBBASE MATERIAL. WEEP HOLE WITH 12"X12" PLASTIC HARDWARE CLOTH ¼" MESH OR GALVANIZED STEEL WIRE, MINIMUM WIRE DIAMETER 0.03", NUMBER 4 MESH HARDWARE CLOTH ANCHORED FIRMLY TO THE OUTSIDE OF THE STRUCTURE.
9. ALL REINFORCING STEEL SHALL HAVE A MIN. COVER OF 2".
10. ALL REINFORCING STEEL TO BE CUT CLEAR OF ALL OPENINGS BY 2".
11. CAST-IN PLACE CONCRETE IS TO BE CLASS A3 (3000 PSI). PRECAST CONCRETE IS TO BE 4000 PSI.
12. LENGTH OF SLOT (L) WILL, IN EVERY CASE, BE SHOWN ON PLANS.
13. IF INLET IS CONSTRUCTED IN MEDIAN CURB OR WITH INTEGRAL CURB, GUTTER IS TO BE OMITTED (SEE DETAIL).
14. STANDARD INLETS MAY BE CONSTRUCTED WITH CONCRETE BLOCKS IN ACCORDANCE WITH THE DETAILS SHOWN ON STANDARD DRAWING DI-M.
15. THIS AREA MAY BE EARTHEN, IN WHICH CASE THE EXPANSION JOINTS WILL APPLY ONLY TO CURB AND GUTTER.
16. CONCRETE QUANTITIES SHOWN ARE FOR DEPTH (H) OF 5'-2" WITHOUT PIPES. THE AMOUNT DISPLACED BY PIPES MUST BE DEDUCTED TO OBTAIN TRUE QUANTITIES. FOR INLETS OF DIFFERENT DEPTHS ADD OR SUBTRACT 0.32 CUBIC YARDS OF CONCRETE FOR EACH FOOT OF DEPTH.
17. LENGTH OF ANGLE IRON AS SHOWN ON SHEET 1 OF 2 IS TO BE L +16" AT 4.1 LBS./FT..
18. * DENOTES LENGTH OF ONE (1) BAR.
19. ALL REINFORCING BARS TO BE #5.
20. WHEN INLET IS USED IN 4'-0" MEDIAN, BACK OF INLET IS TO BE SHAPED TO CONFORM TO PROPOSED CURB.

SPECIFICATION REFERENCE 233 302

STANDARD CURB DROP INLET
12" - 30" PIPE: MAXIMUM DEPTH (H) = 8'
VIRGINIA DEPARTMENT OF TRANSPORTATION

VDOT ROAD AND BRIDGE STANDARDS — REVISION DATE — SHEET 2 OF 2 — 104.10

2016 ROAD & BRIDGE STANDARDS

NYLOPLAST 30" INLINE DRAIN: 2730AG _ _X

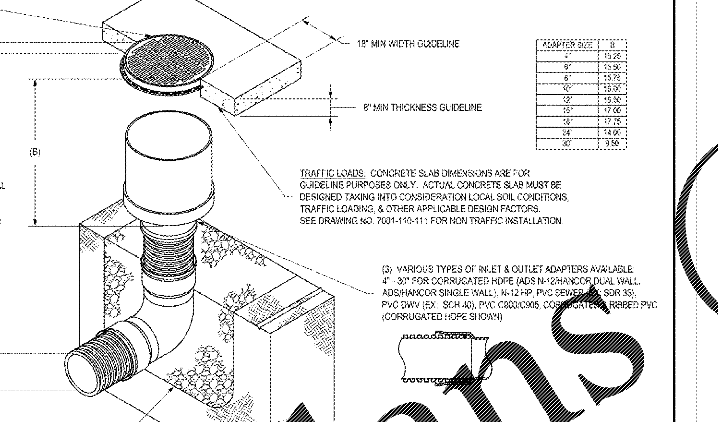

ADAPTER SIZE	B
4"	15.25
6"	15.50
8"	15.75
10"	16.00
12"	16.50
15"	17.00
18"	17.75
24"	14.00
30"	9.50

TRAFFIC LOADS: CONCRETE SLAB DIMENSIONS ARE FOR GUIDELINE PURPOSES ONLY. ACTUAL CONCRETE SLAB MUST BE DESIGNED TAKING INTO CONSIDERATION LOCAL SOIL CONDITIONS, TRAFFIC LOADING, & OTHER APPLICABLE DESIGN FACTORS. SEE DRAWING NO. 7001-110-111 FOR NON TRAFFIC INSTALLATION.

(3) VARIOUS TYPES OF INLET & OUTLET ADAPTERS AVAILABLE: 4" - 30" FOR CORRUGATED HDPE (ADS N-12/HANCOR DUAL WALL, ADS/HANCOR SINGLE WALL), N-12 HP, PVC SEWER (EX: SDR 35), PVC DWV (EX: SCH 40), PVC C900/C905, CORRUGATED & RIBBED PVC (CORRUGATED HDPE SHOWN)

THE BACKFILL MATERIAL SHALL BE CRUSHED STONE OR OTHER GRANULAR MATERIAL MEETING THE REQUIREMENTS OF CLASS I, CLASS II, OR CLASS III MATERIAL AS DEFINED IN ASTM D2321. BEDDING & BACKFILL FOR SURFACE DRAINAGE INLETS SHALL BE PLACED & COMPACTED UNIFORMLY IN ACCORDANCE WITH ASTM D2321.

GRATE OPTIONS	LOAD RATING	PART #	DRAWING #
PEDESTRIAN	MEETS H-20	3099CGP	7001-110-220
STANDARD	MEETS H-20	3099CGS	7001-110-221
SOLID COVER	MEETS H-20	3099CGC	7001-110-222
	N/A	3099CGD	7001-110-223

1 - GRATES/SOLID COVER SHALL BE DUCTILE IRON PER ASTM A536 GRADE 70-50-05.
2 - FRAMES SHALL BE DUCTILE IRON PER ASTM A536 GRADE 70-50-05.
3 - DRAINAGE CONNECTION STUB JOINT TIGHTNESS SHALL CONFORM TO ASTM D3212 FOR CORRUGATED HDPE (ADS N-12/HANCOR DUAL WALL), N-12 HP, & PVC SEWER.
4 - DIMENSIONS ARE FOR REFERENCE ONLY. ACTUAL DIMENSIONS MAY VARY.
5 - DIMENSIONS ARE IN INCHES.
6 - SEE DRAWING NO. 7001-110-275 FOR ADS N-12 & HANCOR DUAL WALL BELL INFORMATION & DRAWING NO. 7001-110-364 FOR N-12 HP BELL INFORMATION.

THIS PRINT DISCLOSES SUBJECT MATTER IN WHICH NYLOPLAST HAS PROPRIETARY RIGHTS. THE RECEIPT OR POSSESSION OF THIS PRINT DOES NOT CONFER, TRANSFER, OR LICENSE THE USE OF THE DESIGN OR TECHNICAL INFORMATION SHOWN HEREIN REPRODUCTION OF THIS PRINT OR ANY INFORMATION CONTAINED HEREIN, OR MANUFACTURE OF ANY ARTICLE HEREFROM, FOR THE DISCLOSURE TO OTHERS IS FORBIDDEN, EXCEPT BY SPECIFIC WRITTEN PERMISSION FROM NYLOPLAST.

DRAWN BY	EBC	MATERIAL	
DATE	04-03-06	PROJECT NO./NAME	
REVISED BY	NMH		
DATE	03-15-15		
DWG SIZE	A	SCALE 1:40	SHEET 1 OF 1

Nyloplast — 3130 VERONA AVE, BUFORD, GA 30518, PHN (770) 932-2443, FAX (770) 932-2490, www.nyloplast-us.com

TITLE: 30 IN INLINE DRAIN QUICK SPEC INSTALLATION DETAIL — DWG NO. 7003-110-029 — REV E

Rinker MATERIALS™ — Concrete Pipe Division

STC 450i Precast Concrete Stormceptor® (450 U.S. Gallon Capacity)

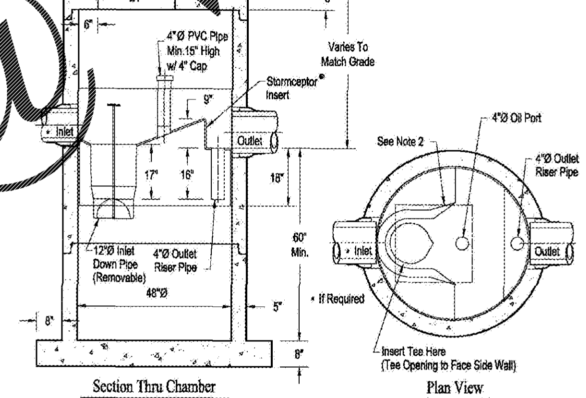

Notes:
1. The Use Of Flexible Connection is Recommended at The Inlet and Outlet Where Applicable.
2. The Cover Should be Positioned Over The Inlet Drop Pipe and The Oil Port.
3. The Stormceptor System is protected by one or more of the following U.S. Patents: #4985148, #5498331, #5725760, #5753115, #5849181, #6068765, #6371690.
4. Contact a Concrete Pipe Division representative for further details not listed on this drawing.

Rinker 027

2016 ROAD & BRIDGE STANDARDS

DI-7, 7A, 7B

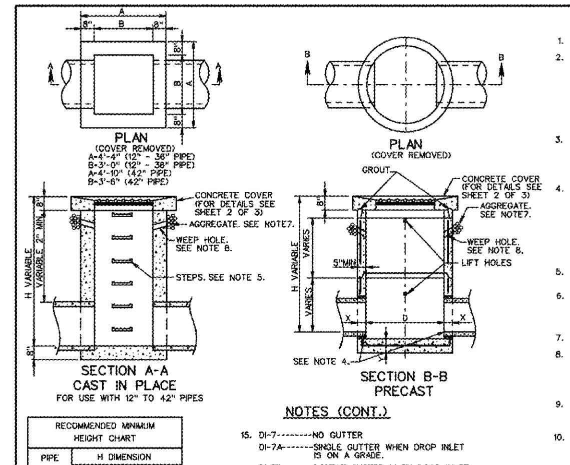

RECOMMENDED MINIMUM HEIGHT CHART		
PIPE SIZE	H DIMENSION CONC.	H DIMENSION CORR. METAL
12"	2'-6"	2'-5"
15"	2'-9¼"	2'-8"
18"	3'-0½"	2'-11"
21"	3'-3¾"	3'-2"
24"	3'-7"	3'-5"
27"	3'-10¼"	3'-8"
30"	4'-1½"	3'-11"
33"	4'-4¾"	4'-2"
36"	4'-8"	4'-5"
42"	5'-2½"	4'-11"

NOTES

1. DEPTH OF INLET (H) TO BE SHOWN ON PLANS.
2. THE "H" DIMENSION SHOWN ON THE STANDARDS AND SPECIFIED ON THE PLANS WILL BE MEASURED FROM THE INVERT OF THE OUTFALL PIPE TO THE TOP OF THE STRUCTURE. PLAN "H" DIMENSIONS ARE APPROXIMATE ONLY FOR ESTIMATING PURPOSES AND THE ACTUAL DIMENSIONS SHALL BE DETERMINED BY THE CONTRACTOR FROM FIELD CONDITIONS. MAXIMUM DEPTH (H) TO BE 12'-8.
3. WHEN SPECIFIED ON THE PLANS THE INVERT IS TO BE SHAPED IN ACCORDANCE WITH STANDARD IS-1. THE COST OF FURNISHING AND PLACING ALL MATERIALS INCIDENTAL TO THE SHAPING IS TO BE INCLUDED IN THE BID PRICEN FOR THE STRUCTURE.
4. IN THE EVENT THE INVERT OF THE OUTFALL PIPE IS HIGHER THAN THE BOTTOM OF THE STRUCTURE, THE INVERT OF THE STRUCTURE SHALL BE SHAPED WITH CEMENT MORTAR TO PREVENT STANDING OR PONDING OF WATER IN THE STRUCTURE. THE COST OF FURNISHING AND PLACING ALL MATERIALS INCIDENTAL TO THE SHAPING IS TO BE INCLUDED IN THE BID PRICE FOR THE STRUCTURE.
5. STEPS ARE TO BE PROVIDED WHEN H IS 4'-0" OR GREATER. FOR DETAILS SEE STANDARD ST-1.
6. REINFORCED CONCRETE FOOTING MAY BE PRECAST OR CAST-IN-PLACE. TWO LIFTING HOOKS OF FABRICATORS DESIGN TO BE PROVIDED IN PRECAST FOOTING.
7. 4" DEPTH AGGREGATE #68,#78, OR #8 X 6" WIDTH.
8. 3" DIAMETER WEEP HOLE WITH 12"X12" PLASTIC HARDWARE CLOTH ¼" MESH OR GALVANIZED STEEL WIRE, MINIMUM WIRE DIAMETER 0.03", NUMBER 4 MESH HARDWARE CLOTH ANCHORED FIRMLY TO THE OUTSIDE OF THE STRUCTURE.
9. THE TYPE OF INLET (PRECAST OR CAST IN PLACE), DETAILED HEREON, TO BE CONSTRUCTED, WILL BE AT THE OPTION OF THE CONTRACTOR.
10. FOR DETAILS OF CONCRETE COVER, COLLAR AND GRATE AND THE METHOD OF PLACING APPROACH GUTTER SEE SHEET 2 OF 3.
11. CAST-IN PLACE CONCRETE IS TO BE CLASS A3 (3000 PSI). PRECAST CONCRETE IS TO BE 4000 PSI.
12. CONCRETE QUANTITIES SHOWN ARE FOR INDICATED DEPTH (H) WITHOUT PIPES. THE AMOUNT DISPLACED BY PIPES MUST BE DEDUCTED TO OBTAIN TRUE QUANTITIES. FOR INLETS OF DIFFERENT DEPTHS ADD OR SUBTRACT THE APPROPRIATE CUBIC YARDS OF CONCRETE FOR EACH FOOT OF DEPTH.
13. PAVED DITCHES ARE TO BE TRANSITIONED TO MEET INLET GUTTER AS SHOWN IN STANDARD PG-2A.
14. PROVIDE SAFETY SLABS WHEN SPECIFIED ON THE PLANS.

NOTES (CONT.)

15. DI-7 --------NO GUTTER
DI-7A -------SINGLE GUTTER WHEN DROP INLET IS ON A GRADE.
DI-7B ------ DOUBLE GUTTER WHEN DROP INLET IS IN A SAG BETWEEN TWO GRADES.
16. FOR DETAILS OF PRECAST DI-7 NOT SHOWN HEREON SEE PRECAST UNIT ASSEMBLY DIAGRAM, PAGE 103.01, FOR PRECAST GENERAL NOTES, PAGE 103.02 AND FOR APPLICABLE PRECAST BASE, RISER AND TOP DETAILS, PAGES 103.07 THRU 103.12.
17. GRATE BARS TO BE PARALLEL TO DITCH FLOW.

PIPE SIZE	12"	15"	18"	24"	30"	36"	42"
MINIMUM DEPTH H	2'-0"	2'-3¼"	2'-6½"	3'-1"	3'-7½"	4'-2"	4'-8½"
CONCRETE CUBIC YARDS	.947	1.045	1.143	1.339	1.535	1.731	1.927

INCREMENT PER FOOT OF ADDITIONAL DEPTH (H) = 0.362 CU. YDS. (12" - 36" PIPE); = 0.410 CU. YDS. (42" PIPE)

SPECIFICATION REFERENCE 241 503

STANDARD MEDIAN DROP INLET
12" TO 42" PIPE
VIRGINIA DEPARTMENT OF TRANSPORTATION

VDOT ROAD AND BRIDGE STANDARDS — REVISION DATE — SHEET 1 OF 3 — 104.22

2016 ROAD & BRIDGE STANDARDS

No.	REVISIONS	DATE	BY

Kimley»Horn
© 2018 KIMLEY-HORN AND ASSOCIATES, INC.
1700 WILLOW LAWN DR, SUITE 200, RICHMOND, VA 23230
PHONE: 804-673-3882
WWW.KIMLEY-HORN.COM

COMMONWEALTH OF VIRGINIA — J. RANDALL ROYAL — Lic. No. 14950 — 8/24/18 — PROFESSIONAL ENGINEER

KHA PROJECT 116607003 | DATE 08/24/2018 | SCALE AS SHOWN | DESIGNED BY LEY | DRAWN BY LEY | CHECKED BY JY

DRAINAGE DETAILS

WAWA AT NEWTOWN AND STONEY POINT
PREPARED FOR
WAWA

CITY OF NORFOLK — VIRGINIA

SHEET NUMBER
CG-502

Plotted By: Young, Lauren (Virginia Beach) Sheet Set: Khc Layout: CD-502 DRAINAGE DETAILS October 02, 2018 09:01:40am K:\vab_civil\116607003 - wawa - newtown & stoney pt\CADD\plansheets\CD-501DRAINAGE DETAILS.dwg
This document, together with the concepts and designs presented herein, as an instrument of service, is intended only for the specific purpose and client for which it was prepared. Reuse of and improper reliance on this document without written authorization and adaptation by Kimley-Horn and Associates, Inc. shall be without liability to Kimley-Horn and Associates, Inc.

Order Plans @ WWW.LDLine.com