MIAMI-DADE COUNTY
DEPARTMENT OF PERMITTING, ENVIRONMENT, AND REGULATORY AFFAIRS (PERA)

MIAMI-DADE COUNTY
PRODUCT CONTROL SECTION
11805 SW 26 Street, Room 208
Miami, Florida 33175-2474
T (786) 315-2590 F (786) 315-2599
www.miamidade.gov/pera/

NOTICE OF ACCEPTANCE (NOA)

Sto Corporation
3800 Camp Creek Parkway Bldg. 1400 Suite 120
Atlanta, GA 30331

SCOPE:
This NOA is being issued under the applicable rules and regulations governing the use of construction materials. The documentation submitted has been reviewed and accepted by Miami-Dade County PERA - Product Control Section to be used in Miami Dade County and other areas where allowed by the Authority Having Jurisdiction (AHJ).
This NOA shall not be valid after the expiration date stated below. The Miami-Dade County Product Control Section (In Miami Dade County) and/or the AHJ (in areas other than Miami Dade County) reserve the right to have this product or material tested for quality assurance purposes. If this product or material fails to perform in the accepted manner, the manufacturer will incur the expense of such testing and the AHJ may immediately revoke, modify, or suspend the use of such product or material within their jurisdiction. PERA reserves the right to revoke this acceptance, if it is determined by Miami-Dade County Product Control Section that this product or material fails to meet the requirements of the applicable building code.
This product is approved as described herein, and has been designed to comply with the Florida Building Code, including the High Velocity Hurricane Zone.

DESCRIPTION: Sto HI-PLY Exterior Insulation and Finish System – L.M.I.

APPROVAL DOCUMENT: Drawing No. **Sto HI-PLY**, Sheets 1 through 3 of 3, titled "Sto HI-PLY EIFS for Large Missile Impact Resistance" dated 09/12/2011, with no revisions, prepared by STO Corporation, signed and sealed by Christopher B. Shiver, P.E., bearing the Miami-Dade County Product Control renewal stamp with the Notice of Acceptance number and approval date by the Miami-Dade County Product Control Section.

MISSILE IMPACT RATING: Large and Small Missile Impact Resistant

LABELING: Each component shall bear a permanent label with the manufacturer's name or logo, city, state and following statement: "Miami-Dade County Product Control Approved", unless otherwise noted herein.

RENEWAL of this NOA shall be considered after a renewal application has been filed and there has been no change in the applicable building code negatively affecting the performance of this product.

TERMINATION of this NOA will occur after the expiration date or if there has been a revision or change in the materials, use, and/or manufacture of the product or process. Misuse of this NOA as an endorsement of any product, for sales, advertising or any other purposes shall automatically terminate this NOA. Failure to comply with any section of this NOA shall be cause for termination and removal of NOA.

ADVERTISEMENT: The NOA number preceded by the words Miami-Dade County, Florida, and followed by the expiration date may be displayed in advertising literature. If any portion of the NOA is displayed, then it shall be done in its entirety.

INSPECTION: A copy of this entire NOA shall be provided to the user by the manufacturer or its distributors and shall be available for inspection at the job site at the request of the Building Official.
This NOA **renews NOA # 07-0104.04** and consists of this page 1 and evidence page E-1, as well as approval document mentioned above.
The submitted documentation was reviewed by **Carlos M. Utrera, P.E.**

MIAMI-DADE COUNTY APPROVED

11/03/2011

NOA No. 11-0930.06
Expiration Date: January 29, 2017
Approval Date: November 10, 2011

NOTICE OF ACCEPTANCE: EVIDENCE SUBMITTED

A. DRAWINGS
1. Drawing No. **Sto HI-PLY**, Sheets 1 through 3 of 3, titled "Sto HI-PLY EIFS for Large Missile Impact Resistance" dated 09/12/2011, with no revisions, prepared by STO Corporation, signed and sealed by Christopher B. Shiver, P.E.

B. TESTS *"Submitted under NOA # 07-0104.04"*
1. Test reports on 1) Air Infiltration Test, per FBC, TAS 202-94
2) Uniform Static Air Pressure Test, Loading per FBC TAS 202-94
3) Water Resistance Test, per FBC, TAS 202-94
4) Cyclic Wind Pressure Loading per FBC, TAS 203-94
along with marked-up drawings and installation diagram, prepared by Hurricane Test Laboratory, LLC, Report No. **G064-0605-06**, dated June 22, 2006, signed and sealed by Vinu J. Abraham, P.E.

C. CALCULATIONS *"Submitted under NOA # 07-0104.04"*
1. Calculations for R-Wall Class PB EIFS over plywood sheathing, sheets 1 through 5, dated 06/16/1997, prepared by Cerny & Ivey Engineers, Inc., signed and sealed by A. C. Ivey, P.E.
2. Calculations for R-Wall Class B System, sheets 1 through 52, signed and sealed by A. C. Ivey, P.E., on 11/04/1999.

D. QUALITY ASSURANCE
1. Miami-Dade Department of Permitting, Environment, and Regulatory Affairs (PERA)

E. MATERIAL CERTIFICATIONS
1. None.

F. STATEMENTS
1. Statement letter of code conformance to FBC 2007 and no financial interest issued by Chris Shiver, P.E., LLC, dated 09/17/2011, signed and sealed by Christopher B. Shiver, P.E.

"Submitted under NOA # 07-0104.04"
2. Statement letter of code conformance issued by Hurricane Test Laboratory, LLC, Test Reports No. **G064-0605-06**, dated 06/22/2006, signed and sealed by Vinu J. Abraham, P.E.

11/03/2011
Carlos M. Utrera, P.E.
Product Control Examiner
NOA No. 11-0930.06
Expiration Date: January 29, 2017
Approval Date: November 10, 2011

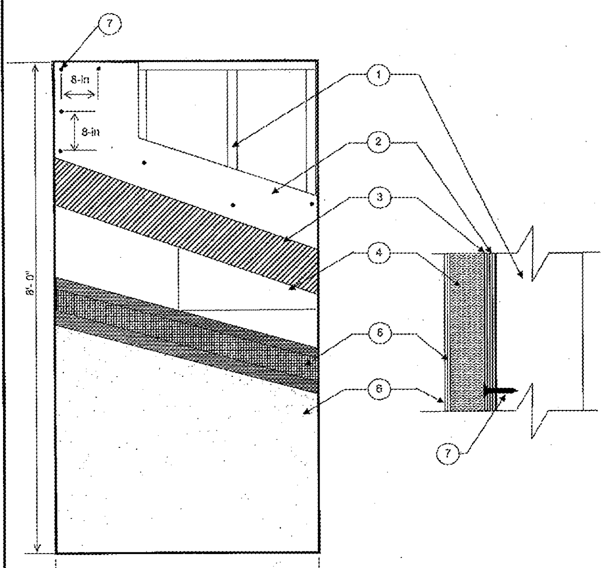

KEY:
1. 2x4 wood or 3-5/8" 18 ga. Metal studs @ 16" o.c.
2. Sheathing: 5/8" CDX 5 ply plywood
3. Sto Dispersion Adhesive (No. 529)
4. EPS board @ 1" thick & 1 pcf by Carpenter
5. Sto Primer/Adhesive -B (No. 101) with Sto Mesh (No. 920) embedded
6. Sto Textured Finish No. 310, 306, and 307
7. Fasteners: 10d common nails @ 8" o.c. in field and perimeter for wood studs. #8 x 1-1/4" type S-12 screws @ 8" o.c. in field and perimeter to metal studs.

PRODUCT RENEWED as complying with the Florida Building Code
Acceptance No 11-0930.06
Expiration Date 01/29/2017
By
Miami Dade Product Control

DESCRIPTION:

1.1 Substrates approved with the system

1.1.1 Minimum 2 x 4 wood or 3-5/8" x 1-5/8"x18 ga. Steel studs @ 16" o.c. – 5/8" CDX 5-ply plywood over steel studs with #8 x 1-1/4" drywall screws @ 8" field and perimeter or 10d common nails @ 8" o.c. field and perimeter over wood studs.
1.1.2 Sto insulation (Carpenter) EPS Expanded Polystyrene insulation minimum 1" thick with a density of 1 pcf as approved by Miami-Dade County NOA # 01.0718.02.
1.1.3 Sto Dispersion Adhesive (No. 829) a ready-mixed acrylic based adhesive used to attach Sto insulation board to the sheathing in the Sto Hi-Ply exterior insulation and finish system.
1.1.4 Sto Primer/Adhesive-B (No. 101) is a polymer modified cement based material used as an adhesive and base coat in Sto systems.
1.1.5 Sto reinforcing mesh (No. 920) is a glass fiber fabric used for impact resistance of the Sto systems.
1.1.6 Sto textured finishes (No. 310, 306, and 307) are ready-mixed acrylic-based exterior or interior textured finishes used as decoration and protection with the Sto systems. Three are available: Fine Sand, Medium Sand and Swirl.

1.2 Application

1.2.1 The exposed plywood surface is cleaned to remove any bond inhibiting particles from the surface of the plywood.
1.2.2 The Sto Dispersion Adhesive is mixed using a clean rust-free high-speed electric drill and paddle. The adhesive is applied to the back of the Sto (Carpenter) insulation board using a 3/16" x 5/16" U-notched trowel. Uniform ribbons of adhesive are formed on the Sto (Carpenter) insulation board parallel to the long dimension of the board.
1.2.3 The Sto (Carpenter) insulation board, minimum 1" thick is applied to the plywood surface horizontally with staggered joints. Uniform pressure is applied to the insulation board to ensure proper adhesion to the plywood surface. Once the entire surface of the plywood is covered with the insulation board it is left overnight to dry.
1.2.4 The Sto Primer/Adhesive-B (No. 101) is mixed with 7-9 quarts of water using a clean high-speed electric drill and paddle. The mixture is allowed to set for approximately 5 minutes and then remixed to a uniform consistency. A 1/8 inch thick layer is applied to the exposed surface of the Sto (Carpenter) insulation board using a stainless steel trowel.
1.2.5 Sto Mesh is embedded in the wet Primer/Adhesive-B by troweling from the center of the mesh to the edges of the mesh and the excess Primer/Adhesive-B is removed. This process is repeated until the entire exposed area of the insulation board is covered with mesh. The final thickness of the Primer/Adhesive-B is a minimum 1/16". The Primer/Adhesive-B is allowed to dry for a minimum of 12 hours.
1.2.6 Once the mesh reinforcing coats are dry and cured, a minimum 1/16" coat of Sto textured finish is applied to the entire surface.

GENERAL NOTES:

1) This system has been designed in accordance with the 2007 Florida Building Code with 2009 supplement.
2) This system has been tested in accordance with the Florida Building Code Protocols TAS-202 and TAS-203 Structural and Cyclic Testing.
3) This system shall be applied by a licensed plastering contractor following the recommendations of Sto Corp., this notice of acceptance and applicable sections of the Florida Building Code.
4) The engineer and/or architect of record for each project using this system shall size the stud framing to ensure conformance with stud deflection and stress limitations as required by governing codes and this document.
5) Insulation boards shall be placed in a running bond pattern.
6) All studs used with this system shall be completely sheathed at the interior flange or bridged at a maximum every 5 feet of stud length, or as specified by the stud manufacturer.
7) All steel studs shall be structural with a 1-5/8" min. flange width and have minimum yield strength of 33,000 psi and the wood shall be SYP (SG 0.50) or better.
8) Details on page No.s 2 and 3 of 3 are typical and show intent to prevent water infiltration into and behind the system. Alternate details and specific conditions not covered by the typical details are the responsibility of the licensed design professional in consultation with Sto Corp.

Design Pressure Rating
Wood Studs +/- 100 psf
Metal Studs +/- 74 psf
Installed over Impact Resistant Substrate

Sto Corp.
3800 Camp Creek Parkway
Building 1400, Suite 120
Atlanta, GA 30331
Large Missile Impact Resistance
Sto HI-Ply
Date: 9/12/2011
Not To Scale

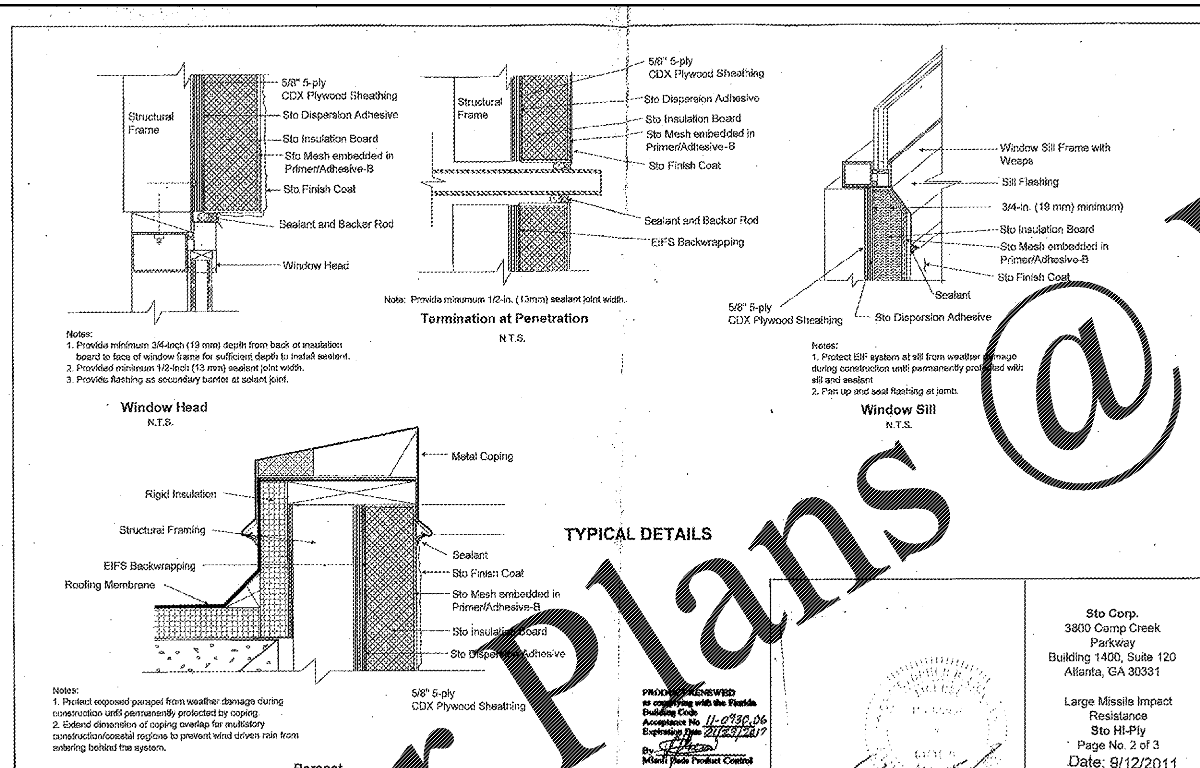

Notes:
1. Provide minimum 3/4-inch (19 mm) depth from back of insulation board to face of window frame for sufficient depth to install sealant.
2. Provided minimum 1/2-inch (13 mm) sealant joint width.
3. Provide flashing as secondary barrier at selant joint.

Window Head
N.T.S.

Termination at Penetration
N.T.S.

Notes:
1. Protect EIF system at sill from weather damage during construction until permanently protected with sill and sealant
2. Pan up and seal flashing at jamb.

Window Sill
N.T.S.

Notes:
1. Protect exposed parapet from weather damage during construction until permanently protected by coping.
2. Extend dimension of coping overlap for multistory construction/coastal regions to prevent wind driven rain from entering behind the system.

Parapet
N.T.S.

TYPICAL DETAILS

PRODUCT RENEWED as complying with the Florida Building Code
Acceptance No 11-0930.06
Expiration Date 01/29/2017
By
Miami Dade Product Control

Sto Corp.
3800 Camp Creek Parkway
Building 1400, Suite 120
Atlanta, GA 30331
Large Missile Impact Resistance
Sto Hi-Ply
Page No. 2 of 3
Date: 9/12/2011
Not To Scale

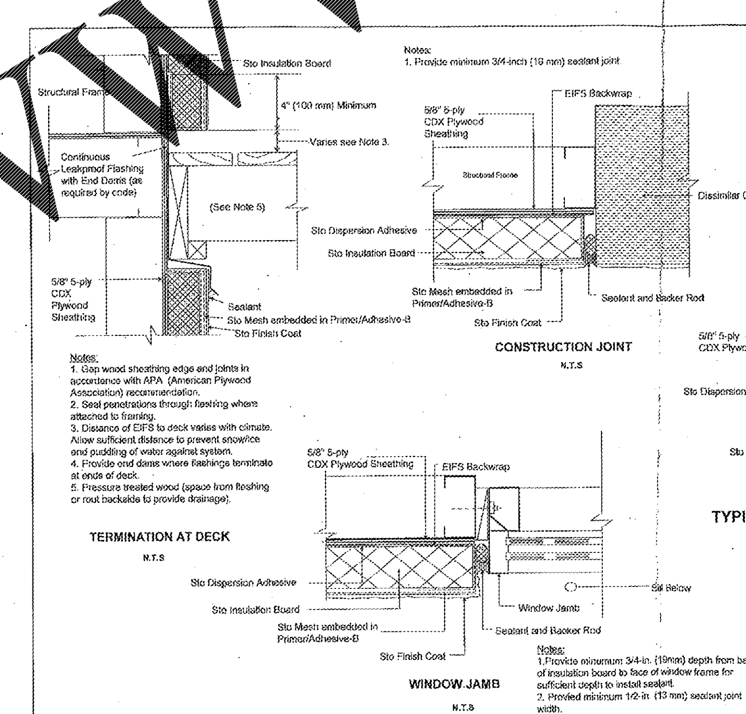

Notes:
1. Provide minimum 3/4-inch (19 mm) sealant joint.

CONSTRUCTION JOINT
N.T.S

Notes:
1. Gap wood sheathing edge and joints in accordance with APA (American Plywood Association) recommendation.
2. Seal penetrations through flashing where attached to framing.
3. Distance of EIFS to deck varies with climate. Allow sufficient distance to prevent snow/ice and puddling of water against system.
4. Provide end dams where flashings terminate at ends of deck.
5. Pressure treated wood (space from flashing or rout backside to provide drainage).

TERMINATION AT DECK
N.T.S

Notes:
1. Provide minumum 3/4-in. (19mm) depth from back of insulation board to face of window frame for sufficient depth to install sealant.
2. Provied minimum 1/2-in. (13 mm) sealant joint width.

WINDOW JAMB
N.T.S

Notes:
1. Provide continuous leakproof flashing (as required by code) to divert water from entering into the wall system.
2. Backer rod and sealant at EIFS termination to the diverter flashing to prevent water from penetrating behind the EIFS.

OVERHANG
N.T.S

TYPICAL DETAILS

PRODUCT RENEWED as complying with the Florida Building Code
Acceptance No 11-0930.06
Expiration Date 01/29/2017
By
Miami Dade Product Control

Sto Corp.
3800 Camp Creek Parkway
Building 1400, Suite 120
Atlanta, GA 30331
Large Missile Impact Resistance
Sto Hi-Ply
Page No. 3 of 3
Date: 9/12/2011
Not To Scale

Order Plans @ www.EDILine.com

PANDA EXPRESS CHINESE KITCHEN

PANDA EXPRESS, INC.
1683 Walnut Grove Ave.
Rosemead, California
91770
Telephone: 626.799.9898
Facsimile: 626.372.8288

All ideas, designs, arrangement and plans indicated or represented by this drawing are the property of Panda Express Inc. and were created for use on this specific project. None of these ideas, designs, arrangements or plans may be used by or disclosed to any person, firm, or corporation without the written permission of Panda Express Inc.

REVISIONS:

ISSUE DATE:

1st	ISSUE FOR BUILDING PERMIT	08-16-18
2nd	ISSUE FOR BID	11-29-18

DRAWN BY: RR

PANDA PROJECT #: S8-19-D6558
ARCH PROJECT #: 1804

RANDY REYNOLDS ARCHITECT
315 WALTER ROBERTS ST * FRANKLIN, TN 37064
PHONE (615) 496-6750 * FAX (866) 584-1225
REGISTERED FLORIDA ARCHITECT # AR0015528

FL N.O.A. DOCUMENTATION — FOR INFORMATION ONLY

PANDA EXPRESS
US 98 and PORTSIDE DRIVE
3868 GULF BREEZE PARKWAY
GULF BREEZE, FL

2200 TRUE - R1 - DAB 12

NOA - 5

NOA DOCUMENTATION
E I F S SYSTEM