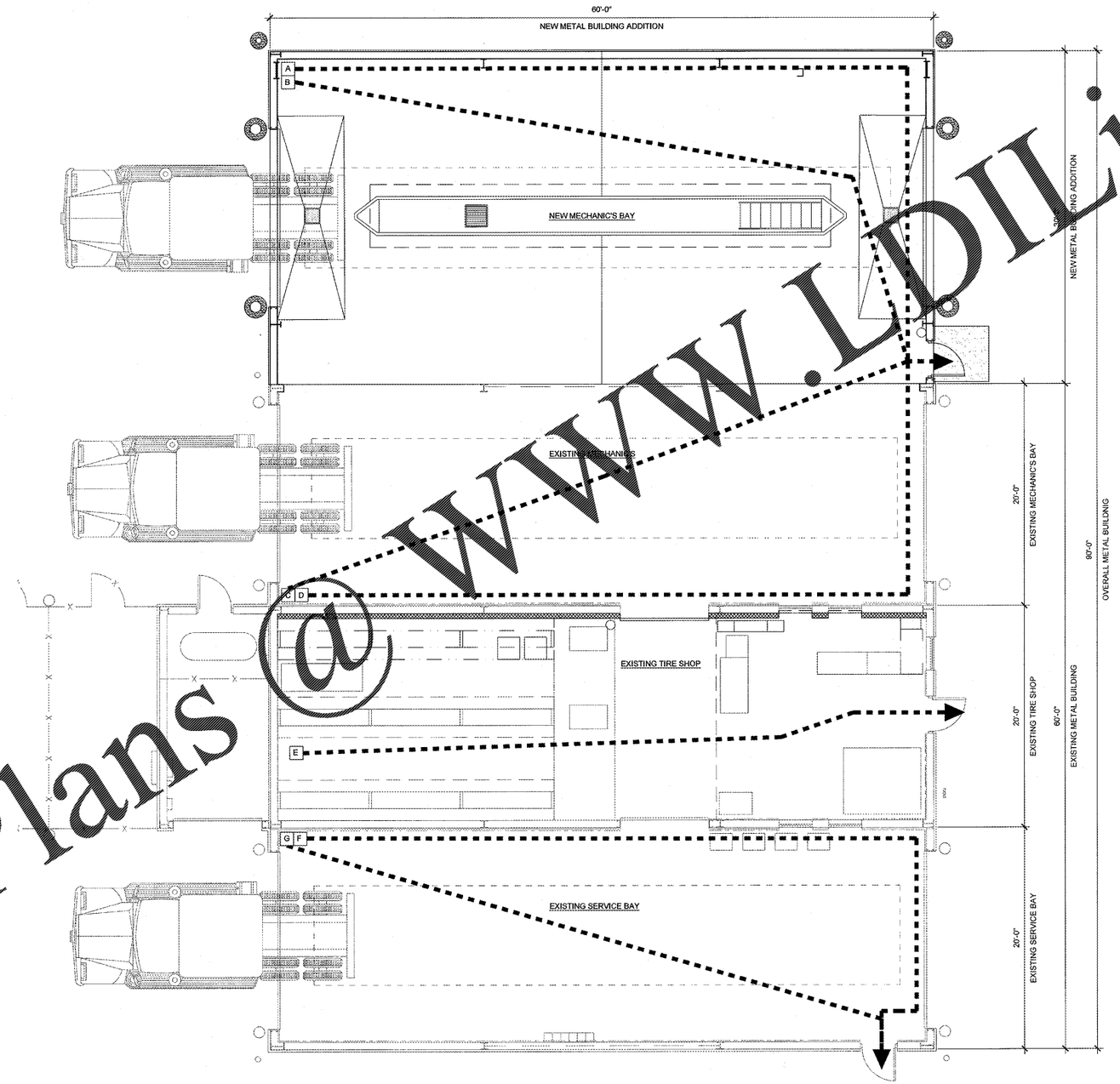

A EGRESS PLAN

SCALE: 3/16" = 1'-0"

TIRE SHOP: S-1 - TIRES

TIRE SHOP	1,200 @ 100 GROSS	12
STORAGE	555 @ 500 GROSS	1
SERVICE AREA	4,200 @ 300 GROSS	14
	TOTAL LOAD	27

EGRESS PATH

EXIT PATH	EXIT PATH DISTANCE
A	84' - 3"
B	70' - 10"
C	62' - 0"
D	77' - 7"
E	58' - 6"
F	76' - 9"
G	56' - 9"

EGRESS

DISTANCE OF TRAVEL - TABLE 1016.2
IBC 200'-0" MAIN LEVEL

EGRESS WIDTH REQUIRED - TABLE 1005.3
EGRESS INCHES REQUIRED IBC 0.20 INCHES PER PERSON SERVED

EGRESS WIDTH REQUIRED (INCHES) EQUALS:
(A) OCCUPANT LOAD x (EGRESS WIDTH PER PERSON SERVED)

OCCUPANTS	X	.20	=	5.4 INCHES REQUIRED
(3) EXIT DOORS	X	33	=	99 INCHES
TOTAL INCHES PROVIDED:				99 INCHES

HFA
ARCHITECTS
ENGINEERS
INTERIORS
HARRISON FRENCH & ASSOCIATES, LTD
1705 S. Walton Blvd., Suite 3
Bentonville, Arkansas 72712
479.273.7780
479.68.520.9685
www.hfa-ae.com

STIPULATION FOR REUSE

THIS DRAWING WAS PREPARED FOR USE IN CONNECTION WITH THE DESIGN OF THE COMPONENTS DESCRIBED THEREIN. THE DESIGN, ARTWORK, DRAWINGS AND SPECIFICATIONS AS INSTRUMENTS OF SERVICE ARE AND SHALL REMAIN THE PROPERTY OF HFA. THE REPRODUCTION, ALTERATION OR USE OF THIS DRAWING FOR ANY PURPOSE OR PURPOSES OTHER THAN THE SPECIFIC PROJECT FOR WHICH IT WAS PREPARED, IS FORBIDDEN WITHOUT THE EXPRESS WRITTEN CONSENT OF HFA. ANY EXISTING OR ALLEGED ANY OTHER PROJECT IS NOT AUTHORIZED AND MAY BE CORRECTED AT THE SOLE

13365 GLENBROOK AVE
MEADOWVIEW, VA 24361

LIGHT MECHANICAL
SERVICE ADDITION

PROJECT NUMBER: 03-18-20613

Love's®
Travel Stop & Country Stores

COMMONWEALTH OF VIRGINIA
BOGUE L. EBBRECHT
Lic. No. 016472
ARCHITECT
OCT 26 2018

ISSUE BLOCK

STORE NO.	613
DOCUMENT DATE:	10/25/18
CHECKED BY:	RAF
DRAWN BY:	RWM
PROTO CYCLE:	

LIFE SAFETY PLAN

SHEET: YLS1

Order Plans @ WWW.LDILine.com

Oct25,2018-4:23pm - User:robert.morrison
L:\03\03-18-20613 Lovers - Meadowview, VA 613\CONDOCS\Archi\actuarb 111 YLS1 LIFE SAFTEY PLAN.dwg