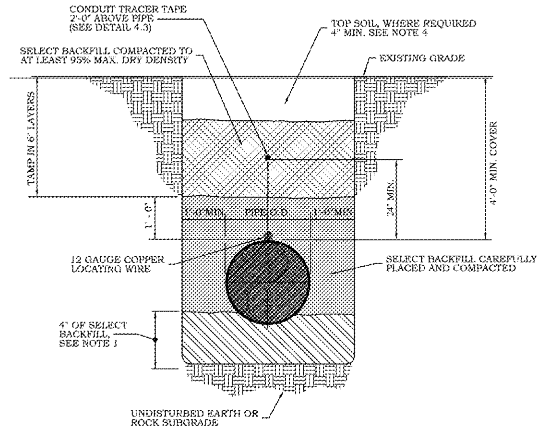

PROFILE VIEW

NOTES:
1. THE BOTTOM OF THE TRENCH SHALL BE ACCURATELY GRADED TO PROVIDE UNIFORM BEARING AND SUPPORT FOR EACH SECTION OF PIPE ON UNDISTURBED SOIL AT EVERY POINT ALONG ITS ENTIRE LENGTH UNLESS UNSUITABLE SUBSOIL IS ENCOUNTERED AT THE NORMAL TRENCH SUBGRADE. IF SUCH MATERIAL IS ENCOUNTERED, THE CONTRACTOR SHALL REMOVE IT TO THE DEPTH DIRECTED BY THE ENGINEER IN THE FIELD AND BACKFILL WITH D.O.T. CLASS I, TYPE I AND II MATERIAL IN 4 INCH LAYERS.
2. BOTTOM OF TRENCH SHALL BE FREE OF WATER PRIOR TO PLACING BEDDING.
3. COMPACT SELECT BACKFILL IN LAYERS NOT TO EXCEED 6 INCHES.
4. PROVIDE 4 INCHES OF TOP SOIL WHERE BEDDING IS REQUIRED. SEE NOTE 5 AT GRAVEL AND PAVED AREAS.
5. GRAVEL AND PAVED DRIVEWAYS TO BE RESTORED IN KIND.
6. CONTRACTOR IS SOLELY RESPONSIBLE FOR TRENCH SAFETY INCLUDING SHEETING AND SHORING WHERE REQUIRED.
7. TRENCH BOTTOM SHALL NOT BE LESS THAN 12 INCHES OR MORE THAN 18 INCHES WIDER THAN THE OUTSIDE DIAMETER OF THE PIPE ON BOTH SIDES.
8. 12 GAUGE SINGLE STRAND COATED WIRE TO BE LOCATED ON TOP OF WATER MAIN.
9. WIRE SHALL BE WRAPPED AROUND EACH CORPORATION A MINIMUM OF TWO WRAPS.
10. WIRE SHALL BE EXTENDED OUTSIDE OF EACH VALVE BOX AND WRAPPED AROUND THE VALVE BOX FOR EASY CONNECTION OF TRACING EQUIPMENT.

NO REVISION OR MODIFICATION OF THIS DETAIL SHALL BE MADE WITHOUT PRIOR WRITTEN APPROVAL FROM AUGUSTA UTILITIES DEPARTMENT. REVISED: JANUARY 2018

TYPICAL TRENCH - WATER MAIN	AUGUSTA UTILITIES DEPARTMENT 452 WALKER STREET, SUITE 200 AUGUSTA, GA 30901	Water Is Life AUGUSTA UTILITIES
AUD DETAIL 1.1		

NOTE: ALL FIRE HYDRANTS TO BE PAINTED YELLOW. PROVIDE 3' RADIUS CLEARANCE AROUND FIRE HYDRANT.

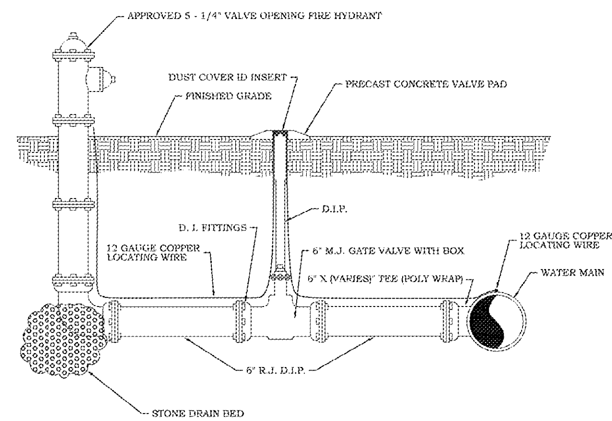

PROFILE VIEW

NOTES:
1. ONLY ONE (1) FIRE HYDRANT RISER BARREL WILL BE ALLOWED UNLESS OTHERWISE APPROVED BY AUD.
2. CONTRACTOR TO COORDINATE LOCATION OF VALVE WITH AUD INSPECTOR.

NO REVISION OR MODIFICATION OF THIS DETAIL SHALL BE MADE WITHOUT PRIOR WRITTEN APPROVAL FROM AUGUSTA UTILITIES DEPARTMENT. REVISED: JANUARY 2018

FIRE HYDRANT ASSEMBLY	AUGUSTA UTILITIES DEPARTMENT 452 WALKER STREET, SUITE 200 AUGUSTA, GA 30901	Water Is Life AUGUSTA UTILITIES
AUD DETAIL 1.2		

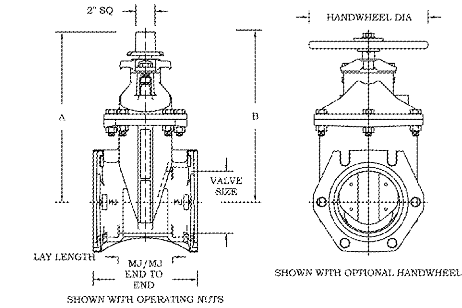

DIMENSION	VALVE SIZE								
	2"	4"	6"	8"	10"	12"	14"	16"	18"
A	9.25	13.91	17.12	20.47	24.06	27.59	33.25	36.75	39.62
B	10.22	N/A	N/A	N/A	N/A	N/A	N/A	N/A	N/A
END TO END - MJ/MJ	8.25	10.00	10.50	11.50	12.50	13.59	20.50	20.88	23.00
LAY LENGTH - MJ/MJ	3.25	5.00	5.50	6.50	7.50	8.50	13.50	13.88	16.00
END TO END - FL/FL (CLASS 125)	7.00	9.00	10.50	11.50	13.00	14.00	15.00	16.00	17.00
END TO END - FL/FL (CLASS 250)	N/A	12.00	15.88	16.50	18.00	19.75	18.50	21.00	22.00
END TO END - TY/TY	N/A	13.00	15.88	17.50	18.75	19.75	N/A	N/A	N/A
END TO END - FL/MJ (CLASS 125)	N/A	9.50	10.50	12.38	13.62	14.38	17.75	18.44	20.00
END TO END - FL/TY (CLASS 125)	N/A	11.00	13.19	14.50	15.88	16.88	N/A	N/A	N/A
END TO END - PVC/PVC	10.75	13.00	15.88	17.50	N/A	N/A	N/A	N/A	N/A
END TO END - THREADED	6.25	N/A	N/A	N/A	N/A	N/A	N/A	N/A	N/A
HANDWHEEL DIAMETER	8.06	10.00	12.00	14.00	15.50	15.50	20.00	20.00	20.00
NO. OF TURNS TO OPEN	9	14	20	26	32	38	44	50	56

NOTES:
1. VERTICAL GATE VALVE ASSEMBLY SHOULD BE FULL BODY DUCTILE IRON.
2. GATE VALVE SHALL BE CONSTRUCTED OF DUCTILE IRON AND SHALL BE FULLY ENCAPSULATED WITH SBR OR EPDM RUBBER.
3. VALVE BODY AND VALVE HAND WHEEL SHALL BE MADE OF DUCTILE IRON.
4. VALVE STEM SHALL BE MADE OF BRONZE IN ACCORDANCE WITH AWWA C509.
5. GATE VALVES SHALL BE NON-RISING STEM TYPE WITH RESILIENT SEATED GATE VALVE UNLESS OTHERWISE SPECIFIED. VALVES SHALL OPEN LEFT, BLACK NUT, IF INSTALLED SOUTH OF GORDON HWY AND OPEN RIGHT, RED NUT, IF INSTALLED NORTH OF GORDON HWY.
6. GATE VALVES SHALL HAVE IDENTIFYING MARK OF THE MANUFACTURER, YEAR OF MANUFACTURE AND PRESSURE RATING CAST ON THE VALVE BODY.
7. SEE VALVE BOX INSTALLATION DETAIL 1.17.

NO REVISION OR MODIFICATION OF THIS DETAIL SHALL BE MADE WITHOUT PRIOR WRITTEN APPROVAL FROM AUGUSTA UTILITIES DEPARTMENT. REVISED: JANUARY 2018

VERTICAL GATE VALVE ASSEMBLY	AUGUSTA UTILITIES DEPARTMENT 452 WALKER STREET, SUITE 200 AUGUSTA, GA 30901	Water Is Life AUGUSTA UTILITIES
AUD DETAIL 1.3		

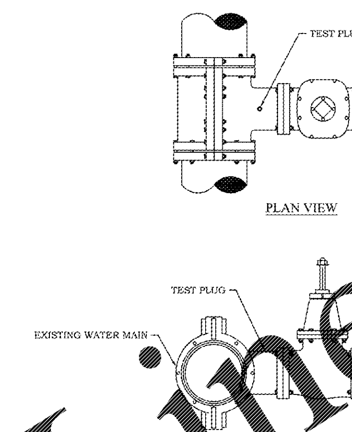

PROFILE VIEW

NOTES:
1. TAPPING VALVE SHALL BE A FULL BODY DUCTILE IRON MUELLER T-2360 RESILIENT WEDGE GATE VALVE MJ X FL ENDS (6"-12"), MUELLER T-2361 RESILIENT WEDGE GATE VALVE MJ X FL (14"-48") OR APPROVED EQUAL.
2. TAPPING SLEEVE SHALL BE A MUELLER H-615 FOR SIZES 6" - 24", & MUELLER T-9 MJ FOR 30" AND 36".
3. SS REPAIR CLAMPS AND MJ SPLIT SLEEVES WILL NOT BE ACCEPTED.
4. TAPPING VALVE SHALL BE PRESSURE TESTED FOR ONE HOUR PRIOR TO TAPPING EXISTING MAIN.
5. AN AUD INSPECTOR SHALL BE PRESENT DURING TESTING.
6. ALL TESTING SHALL BE IN ACCORDANCE WITH AUD SPECIFICATIONS.
7. TESTING PRESSURE SHALL BE 150 PSI FOR ASBESTOS CONCRETE PIPE AND 200 PSI FOR ALL OTHER PIPE MATERIALS.
8. VALVES SHALL OPEN LEFT, BLACK NUT, IF INSTALLED SOUTH OF GORDON HWY AND OPEN RIGHT, RED NUT, IF INSTALLED NORTH OF GORDON HWY.
9. TAPPING VALVE AND SLEEVE TO BE ADEQUATELY SUPPORTED.

NO REVISION OR MODIFICATION OF THIS DETAIL SHALL BE MADE WITHOUT PRIOR WRITTEN APPROVAL FROM AUGUSTA UTILITIES DEPARTMENT. REVISED: JANUARY 2018

TAPPING VALVE AND SLEEVE	AUGUSTA UTILITIES DEPARTMENT 452 WALKER STREET, SUITE 200 AUGUSTA, GA 30901	Water Is Life AUGUSTA UTILITIES
AUD DETAIL 1.7		

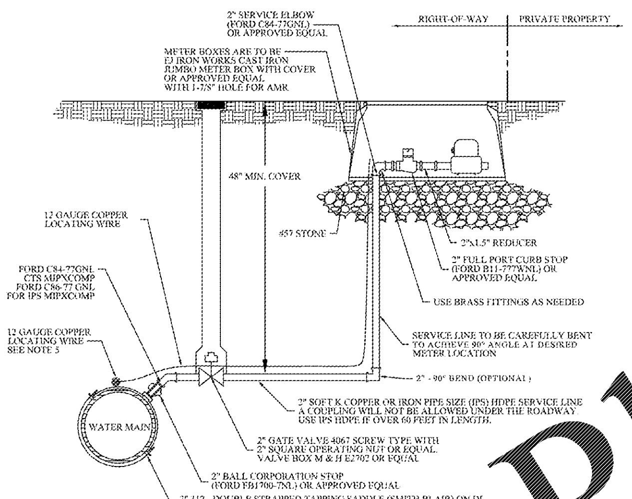

PROFILE VIEW

NOTES:
1. WATER METERS SHALL BE PURCHASED FROM AUGUSTA UTILITIES DEPARTMENT.
2. WATER METERS SHALL BE INSTALLED BY CONTRACTOR.
3. METER BOXES SHALL BE INSTALLED AND MAINTAINED BY THE DEVELOPER UNTIL THE RESIDENCE IS OCCUPIED.
4. COUPLINGS AND REDUCERS REQUIRED ON NEW SERVICES AFTER CURB STOP SHALL BE INSTALLED BY THE CONTRACTOR.
5. 12 GAUGE SINGLE STRAND COATED WIRE TO BE LOCATED ON TOP OF WATER MAIN IF PVC.
6. APPROVED ADAPTERS SHALL BE USED WHERE NECESSARY TO PROVIDE A TRANSITION BETWEEN PIPES AND/OR FITTINGS OF DIFFERING OUTSIDE DIAMETERS AND MATERIALS.
7. METER SHOULD BE LOCATED 1 FOOT INSIDE OF RIGHT OF WAY.

NO REVISION OR MODIFICATION OF THIS DETAIL SHALL BE MADE WITHOUT PRIOR WRITTEN APPROVAL FROM AUGUSTA UTILITIES DEPARTMENT. REVISED: JANUARY 2018

1.5" WATER SERVICE	AUGUSTA UTILITIES DEPARTMENT 452 WALKER STREET, SUITE 200 AUGUSTA, GA 30901	Water Is Life AUGUSTA UTILITIES
AUD DETAIL 1.10		

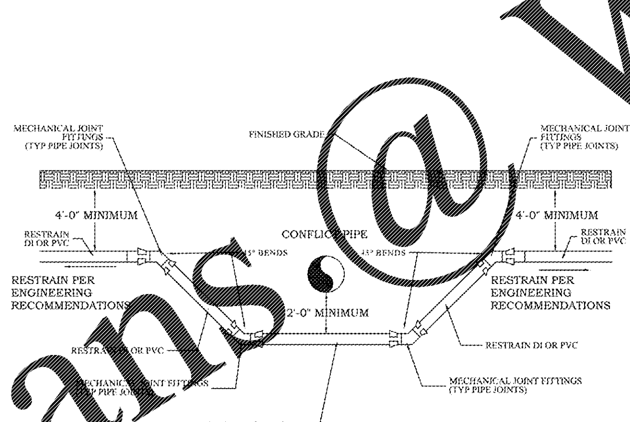

PROFILE VIEW

NO REVISION OR MODIFICATION OF THIS DETAIL SHALL BE MADE WITHOUT PRIOR WRITTEN APPROVAL FROM AUGUSTA UTILITIES DEPARTMENT. REVISED: JANUARY 2018

WATER MAIN VERTICAL CHANGE FOR CROSSING CONFLICT	AUGUSTA UTILITIES DEPARTMENT 452 WALKER STREET, SUITE 200 AUGUSTA, GA 30901	Water Is Life AUGUSTA UTILITIES
AUD DETAIL 1.16		

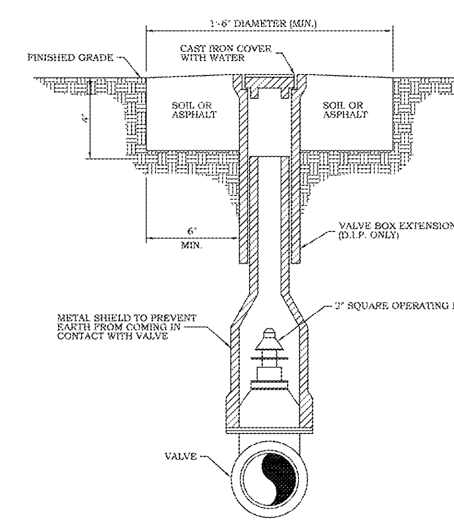

PROFILE VIEW

NO REVISION OR MODIFICATION OF THIS DETAIL SHALL BE MADE WITHOUT PRIOR WRITTEN APPROVAL FROM AUGUSTA UTILITIES DEPARTMENT. REVISED: JANUARY 2018

VALVE BOX INSTALLATION	AUGUSTA UTILITIES DEPARTMENT 452 WALKER STREET, SUITE 200 AUGUSTA, GA 30901	Water Is Life AUGUSTA UTILITIES
AUD DETAIL 1.17		

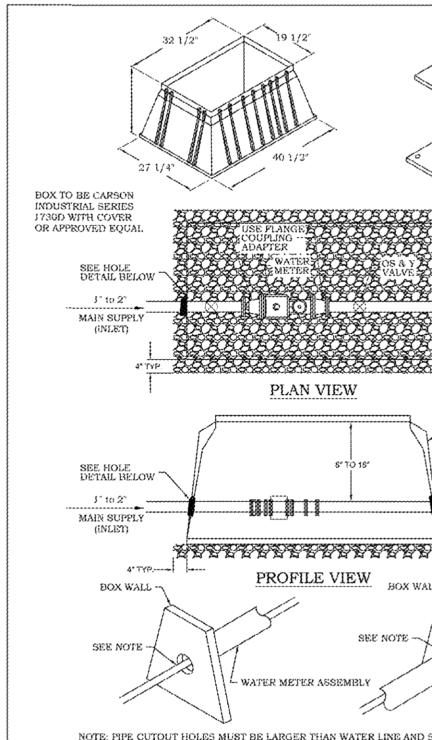

NOTE: PIPE CUTOUT HOLES MUST BE LARGER THAN WATER LINE AND SEALED WITH EXPANSION FOAM OR SILICONE CAULK INSIDE AND OUTSIDE THE BOX TO PREVENT DIRT AND WATER FROM ENTERING

HOLE DETAIL VIEW

REVISED: JANUARY 2018

WATER METER BELOW GROUND ENCLOSURE	AUGUSTA UTILITIES DEPARTMENT 452 WALKER STREET, SUITE 200 AUGUSTA, GA 30901	Water Is Life AUGUSTA UTILITIES
AUD DETAIL 1.19		

Since 1980
Architects • Engineers • Landscape Architects
JOHNSON, LASCHOBER & ASSOCIATES, P.C.
AUGUSTA, GA • MT. PLEASANT, SC
TEL (706) 724-5756 • TEL (843) 619-4656
FAX (706) 724-3955
WWW.THEJLAGROUP.COM

CLIENT: AUGUSTA, GA
535 TELFAIR STREET, AUGUSTA, GA 30901

PROJECT NAME: FIRE STATION #2

PROJECT LOCATION: 928 TELFAIR ST., AUGUSTA, GA 30901

REV	DATE	BY	DESCRIPTION
0	08/29/18	WTB	ISSUED FOR PERMITTING

PROJECT NO.	3042.1604
DRAWN BY :	WTB
CHECKED BY :	WLD
DATE:	10/18/17

SHEET TITLE :

CONSTRUCTION DETAILS - 4 OF 6

SCALE: AS NOTED

DRAWING NO. C-604 REV. 0

This document is the property of Johnson, Laschober & Associates, P.C. The unauthorized reproduction, copying or otherwise use of this document is strictly prohibited and any infringement thereupon may be subject to legal action.

K:\3042\1604\Civil\Station No. 2\C-600.dwg Plotted:8/30/2018 1:03 PM By:Jillian Ready
BORDER: JLA24x36-XREF.DWG REV. 11/15/2017 BLB

Order Plans @ WWW.LDILine.com