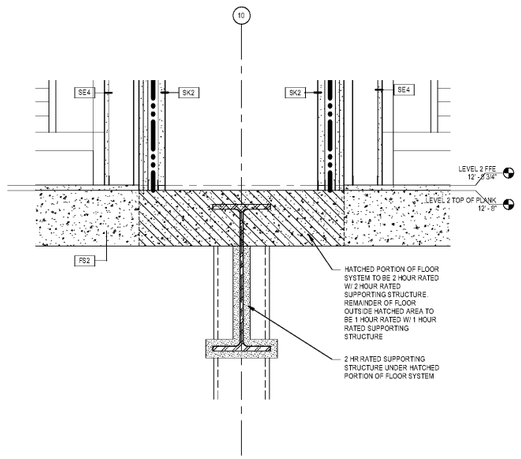

B4 4 LEVEL SHAFT DTL
1 1/2" = 1'-0"

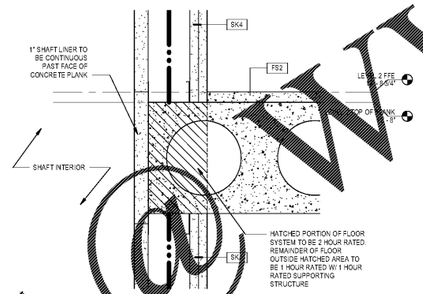

LINEN CHUTE SECTION DTL
3/8" = 1'-0"

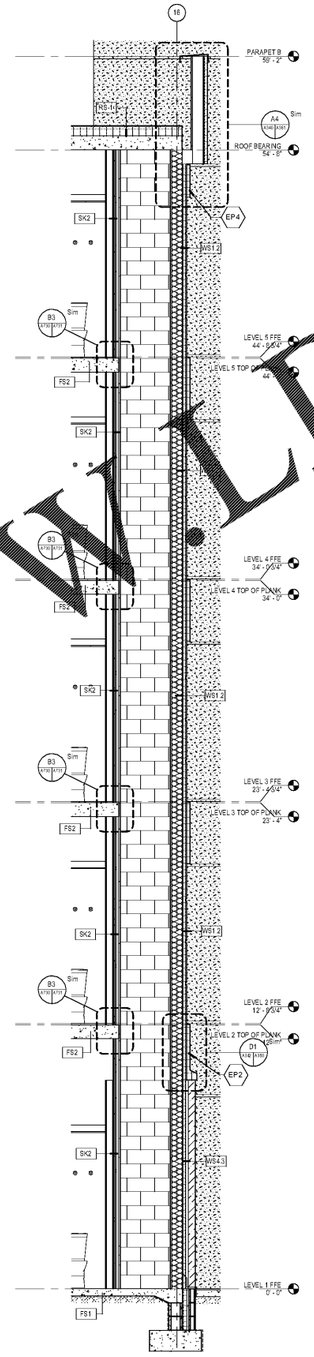

A4 5 LEVEL SHAFT SECTION
3/8" = 1'-0"

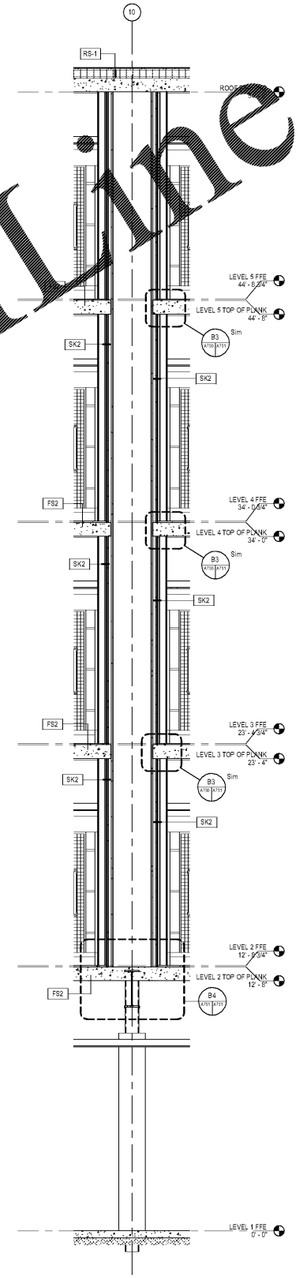

A5 4 LEVEL SHAFT SECTION
3/8" = 1'-0"

Order Plans @ WWW.LDILine.com

mcmillan pazdan smith ARCHITECTURE

CONSULTANT LOGO

SEALS

WINDSOR AUGHTRY

HOME2 ASHEVILLE

390 AIRPORT RD
ARDEN, NC 28704

SHEET ISSUE:
07/30/18
FOR CONSTRUCTION

Revisions		
Number	Description	Date

PRINCIPAL IN CHARGE: BZ
PROJECT ARCHITECT: BZ
DRAWN BY: BT

SHEET TITLE:
TYP GUESTROOM SHAFT SECTIONS & DTLS

SHEET NO. A731

PROJ. NO. 017376.00