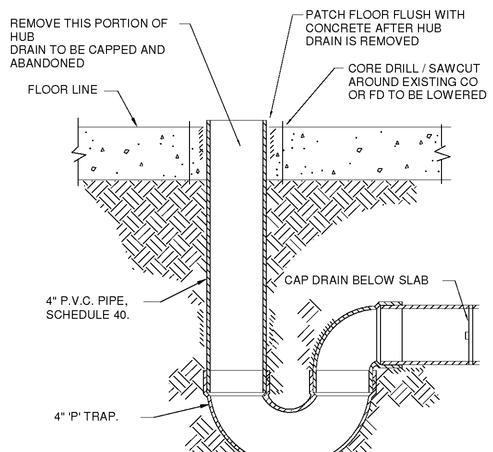

CAP AND ABANDON DRAIN DETAIL

NOT TO SCALE

B

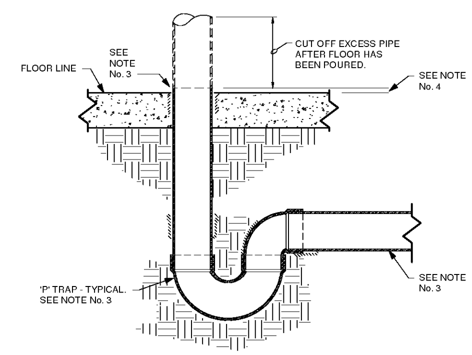

GENERAL NOTES:

1. SLOPE FLOOR TO FLOOR DRAIN AS INDICATED ON CONCRETE PLACEMENT PLAN.
2. REFER TO BUILDING SPECIFICATION SECTION 22 13 00 FOR APPROVED PIPING MATERIAL.
3. REFER TO PLUMBING PLAN FOR LOCATIONS AND SIZES OF DRAINS AND PIPING.
4. TYPICALLY 1" BUT PREFERABLY 1/2" IF PERMITTED BY LOCAL PLUMBING INSPECTOR TO FACILITATE CONDENSATE DRAIN INSTALLATION.

ORIGINAL ISSUE DATE: 2/20/06

CONDENSATE DRAIN DETAIL

MASTER SPECIFICATION DETAIL

DATE: 11/15/17

DRAWN: ZAW

PSD-1

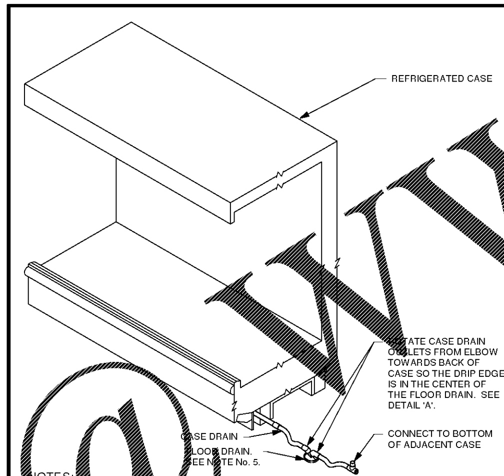

NOTES:

1. DO NOT USE CASE DRAIN SMALLER THAN THE NOMINAL DIAMETER OF PIPE OR WATER SEAL SUPPLIED WITH THE MERCHANDISER.
2. SLOPE THE CASE DRAIN IN THE DIRECTION OF FLOW 1/4" PER FT.
3. CASE DRAIN MUST BE SUPPORTED NO MORE THAN 12" FROM DRAIN HUB TEE.
4. PROVIDE A SUITABLE AIR BREAK BETWEEN FLOOD RIM OF FLOOR DRAIN AND OUTLET OF CASE DRAIN. AN ALTERNATIVE IS TO CUT THE LAST SECTION OF CASE DRAIN AT AN ANGLE.
5. 3" HUB DRAIN FOR PROJECTS UNDER UNIFORM PLUMBING CODE AND 4" HUB DRAIN FOR PROJECTS UNDER INTERNATIONAL PLUMBING CODE.

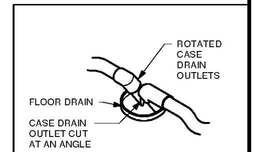

ORIGINAL ISSUE DATE 10/11/12

CASE DRAIN DETAIL

MASTER INSTALLATION DETAIL

DATE: 10/11/12

DRAWN: ZAW

PISD-1

STANDARD PLUMBING ABBREVIATIONS

1 COMP	1 COMPARTMENT SINK
3 COMP	3 COMPARTMENT SINK
A	COMPRESSED AIR
A/E	ARCHITECT / ENGINEER
AAV	AIR ADMITTANCE VALVE
ACCESS	ACCESSORIES
AD	AREA DRAIN
AFF	ABOVE FINISHED FLOOR
AFG	ABOVE FINISHED GRADE
AMP	AMPERE
ANG	ANGLE
ANSI STANDARDS	AMERICAN NATIONAL INSTITUTE
AP	ACCESS PANEL
APPROX	APPROXIMATE
ASPE PLUMBING	AMERICAN SOCIETY OF ENGINEERS
AV	ACID VENT
AW	ACID WASTE
BAS	BUILDING AUTOMATION SYSTEM
BFP	BACKFLOW PREVENTER
BIM	BILL OF MATERIALS
BT	BLOWOFF TANK
BTC	BLOWOFF TANK CONTROL VALVE
BTU	BRITISH THERMAL UNIT
BV	BALANCING VALVE
BT	BATHTUB
BTUH HOUR	BRITISH THERMAL UNIT PER
BWV	BACK WATER VALVE
C	CENTIGRADE (CELCIUS)
CA	COMPRESSED AIR
CB	CATCH BASIN
CD-1	CONSTRUCTION DOCUMENTS (SUBMISSION1)
CD-2	CONSTRUCTION DOCUMENTS (SUBMISSION2)
CFH	CUBIC FEET PER HOUR
CFM	CUBIC FEET PER MINUTE
CF	CUBIC FEET
CI	CAST IRON
CM/S	CUBIC METER PER SECOND
CO	CLEAN OUT
CO2	CARBON DIOXODE
COMP	COMPRESSOR UNIT
CP	CIRCULATION PUMP
CPVC	CHLORINATED POLYVINYL CHLORIDE
CW	COLD WATER (POTABLE)
DD-1	DESIGN DEVELOPMENT (SUBMISSION1)
DD-2	DESIGN DEVELOPMENT (SUBMISSION2)
DEG	DEGREE
DELTA	CHANGE IN TEMPERATURE
DF	DRINKING FOUNTAIN
DI	DEIONIZED WATER
DIA	DIAMETER
DN	DOWN
DS	DOWNSPOUT
EC	ELECTRICAL CONTRACTOR
EGS	EMERGENCY GAS SHUTOFF
EJ	EXPANSION JOINT
EL	ELEVATION
ET	EXPANSION TANK
EXP	EXPANSION
EWC	ELECTRIC WATER COOLER
EWH	ELECTRIC WATER HEATER
EX	EXISTING
F	FAHRENHEIT
FCO	FLOOR CLEANOUT
FD	FLOOR DRAIN
FDC	FIRE DEPARTMENT CONNECTION
FFE	FINISHED FLOOR ELEVATION
FLA	FULL LOAD AMPERE
FOP	FUEL OIL PUMP
FOT	FUEL OIL TANK
FP	FIRE PUMP
FPM	FEET PER MINUTE
FPS	FEET PER SECOND
FS	FLOOR SINK
FSTAT	FREEZESTAT
FT	FEET
FT-LB	FOOT-POUND
FURN	FURNISHED
FW	FILTERED WATER
G	GAS
GA	GAUGE
GAL	GALLONS
GAS	NATURAL GAS
GCO	GRADE CLEAN OUT
GEN	GENERAL
GFWH	GAS FIRED WATER HEATER
GI	GREASE INTERCEPTOR
GPD	GALLONS PER DAY
GPH	GALLONS PER HOUR
GPM	GALLONS PER MINUTE
GPR	GAS PRESSURE REGULATOR
GR	GRAINS
GT	GREASE TRAP
GW	GREASE WASTE
H&CW	HOT & COLD WATER
HB	HOSE BIBB
HC	HVAC CONTRACTOR
HD	HUB DRAIN
HDPE	HIGH DENSITY POLYETHYLENE
HGT	HEIGHT
HP	HORSEPOWER
HT	HOT TAP
HW	HOT WATER
HWR	HOT WATER RETURN
I/O	INPUT/OUTPUT
ICU	INTENSIVE CARE UNIT
ID	INSIDE DIAMETER
IE	INVERT ELEVATION
IN	INCHES
IND	INDIRECT
IN WC	INCH WATER COLUMN
IN-LB	INCH-POUND
INST	INSTALLED
JP	JOCKEY PUMP
KG	KILOGRAM
KG/HR	KILOGRAM PER HOUR
KH	KITCHEN HOOD
KW	KILOWATT
KWH	KILOWATT HOUR

L	LITER
LAV	LAVATORY
LAS	LIMITED AREA SPRINKLER
L/H	LITERS PER HOUR (OR LITERS/HOUR)
L/M	LITERS PER MINUTE (OR LITERS/MINUTE)
L/S	LITERS PER SECOND (OR LITERS/SECOND)
LBS/HR	POUNDS PER HOUR
LF	LINEAR FOOT (FEET)
LIQ	LIQUID
LPG	LIQUID PROPANE GAS
LVG	LEAVING
M	METER, SI UNIT
M/S	METERS PER SECOND (OR METERS/SECOND)
MAU	MAKE-UP AIR UNIT
MAX	MAXIMUM
MBH	1000 BTUH
MGAP	MED GAS ALARM PANEL
MGZV	MED GAS ZONE VALVE
MH	MANHOLE
MHP	MOTOR HORSEPOWER
MIN	MINIMUM
MM	MILLIMETER
MOCP	MAXIMUM OVERCURRENT PROTECTION
MS	MOP SINK
MV	MIXING VALVE
N	NITROGEN
NA	NOT APPLICABLE
NC	NORMALLY CLOSED
NFC	NOT FOR CONSTRUCTION
NG	NATURAL GAS
NIC	NOT IN CONTRACT
NO	NITROUS OXIDE
NO	NUMBER
NOAA	NATIONAL OCEANIC & ATMOSPHERIC ADMINISTRATION
NOM	NOMINAL
NTS	NOT TO SCALE
NUM	NUMBER
O2	OXYGEN
OCP	OVER CURRENT PROTECTION
OD	OUTSIDE DIAMETER
OD	OVERFLOW DRAIN
OI	OIL INTERCEPTOR
OR	OPERATING ROOM
OUT	OUTPUT
P	PUMP
PA	PASCAL
PC	PLUMBING CONTRACTOR
PCF	POUNDS PER CUBIC FOOT (FEET)
PG	PRESSURE GAGE
PIV	POST INDICATOR VALVE
PPM	PARTS PER MILLION
PRV	PRESSURE REGULATING VALVE
PSI	POUNDS PER SQUARE INCH
PSIA	POUNDS PER SQUARE INCH ABSOLUTE
PSIG GAGE	POUNDS PER SQUARE INCH -
PVC	POLYVINYL CHLORIDE
QUAN	QUANTITY
RAD	RADIUS
RD	ROOF DRAIN
RH	ROOF HYDRANT
RL	ROOF LEADER
RO	REVERSE OSMOSIS
RPBF	REDUCED PRESSURE BACKFLOW PREVENTER
RPM	REVOLUTIONS PER MINUTE
RPZ VALVE	REDUCED PRESSURE ZONE
RTU	ROOF TOP UNIT
RV	RELIEF VALVE
S	SANITARY
SAN	SANITARY
SC	SPRINKLER CONTRACTOR
SD	SHOWER DRAIN
SD-2 (SUBMISSION2)	SCHEMATIC DESIGN
SE	SEWAGE EJECTOR
SH	SHOWER
SI	SOLIDS INTERCEPTOR
SK	SINK
SOFT	SOFT WATER
SOL	SOLENOID
SPEC	SPECIFICATION
SP	STAND PIPE
SP GR	SPECIFIC GRAVITY
SQ	SQUARE
SQ FT	SQUARE FOOT (FEET)
SS	STAINLESS STEEL
ST	STORM PIPING
STD	STANDARD
SYS	SYSTEM
TAB	TESTING, ADJUSTING, BALANCE
TD	TRENCH DRAIN
TDH	TOTAL DYNAMIC HEAD
TEMP	TEMPERATURE
TMV	THERMOSTATIC MIXING VALVE
TP	TRAP PRIMER
TS	TAMPER SWITCH
TSTAT	THERMOSTAT
TU	TERMINAL UNIT
UH	UNIT HEATER
UL	UNDERWRITERS LABORATORY
UN	UNION
URN	URINAL
V	VALVE
VAC	VACUUM
VAL	VALVE
VFD	VARIABLE FREQUENCY DRIVE
VP	VACUUM PUMP
VTR	VENT THRU ROOF
W	WATER
WAG	WASTE ANESTHESIA GAS
WB	WASHER BOX
WC	WATER CLOSET
WCO	WALL CLEAN OUT
WH	WALL HYDRANT
WF	WATER FILTER
WTR	WATER
YH	YARD HYDRANT
YR	YEAR

PLUMBING LEGEND

SYMBOL	DESCRIPTION
PLAN-VIEW LINE TYPES	
———	WORK SHOWN FADED INDICATES EXISTING WORK TO REMAIN OR NEW WORK BY OTHERS AS APPLICABLE
– – – –	WORK SHOWN BOLD-DASHED INDICATES SELECTIVE DEMOLITION WORK
———	WORK SHOWN BOLD-CONTINUOUS INDICATES NEW WORK
——►——	DIRECTION OF FLOW
PIPING LINE TYPES	
——S——	SANITARY WASTE PIPING
——V——	SANITARY VENT PIPING
——GW——	GREASE WASTE PIPING
——FD——	DEDICATED FLOOR DRAIN PIPING
——ST——	STORM PIPING (PRIMARY)
PLUMBING ACCESSORIES	
E	PIPE CAP
WCO CO	CO - CLEANOUT, FCO - FLOOR CLEANOUT, GCO - GRADE CLEANOUT, WCO - WALL CLEANOUT
⊗HD	HUB DRAIN
PLUMBING SYMBOLS	
⊗	CONNECT TO EXISTING (FIELD VERIFY EXISTING UTILITY SERVICE TYPE, PRIOR TO MAKING CONNECTION)

GENERAL NOTES

A. BOLD - DASHED LINES ON NEW WORK PLANS INDICATE UNDERGROUND PLUMBING.

B. WHEN POSSIBLE, LOCATE CLEANOUTS SO AS NOT TO FALL IN DOOR OPENINGS, UNDER PALLET RACKS, OR IN MAIN TRAFFIC AISLES.

C. MAKE FINAL CONNECTION TO KROGER SUPPLIED EQUIPMENT.

D. WHEREVER POSSIBLE, NEW PIPING SHALL BE RUN CONCEALED. COORDINATE LOCATION OF ALL PIPING WITH HVAC AND ELECTRIC SUBCONTRACTOR. COORDINATE CUTTING AND PATCHING WITH GENERAL CONTRACTOR.

E. WHEREVER FIXTURES REQUIRING PLUMBING CONNECTIONS ARE FURNISHED BY OWNER, PLUMBING SUBCONTRACTOR SHALL FURNISH AND INSTALL CARRIERS, "P" TRAP AND STOPS.

F. ALL PIPE DROPS IN SALES AREA FROM ROOF TO LOW WALLS OR EQUIPMENT SHOULD BE COORDINATED AND GROUPED TOGETHER WITH OTHER MECHANICAL PIPES. ENSURE ALL PIPING DROPS ARE ARE SUPPORTED EVERY 10'. COORDINATE WITH GENERAL CONTRACTOR.

G. PIPING TO SERVICE AREAS SHALL BE INSTALLED IN FRAMED WALL ON WARM SIDE OF INSULATED WALL PANELS USED FOR PREP ROOMS WALL. RUN SHORTEST DISTANCE TO EQUIPMENT. GROUP INSULATED LINES TOGETHER WHERE EXPOSED IN SALES AREA FOR ALL LINES AT BOTTOM OF BAR JOISTS. PIPING IS NOT ALLOWED INSIDE COOLERS OR FREEZERS.

H. ALL MEP TRADES, INCLUDING SPRINKLER MUST COORDINATE WITH EACH OTHER PRIOR TO INSTALLATION.

I. EXPOSED WATER, WASTE, SODA SYRUP LINES, AND CONDUITS ON WALL, FLOOR, AND CEILING SURFACES ARE PROHIBITED.

J. ALL EQUIPMENT MUST MEET APPLICABLE ANSI STANDARDS FOR CONSTRUCTION AND INSTALLATION. ALL EQUIP. LISTED AS CUSTOM FABRICATED MUST MEET THE APPROPRIATE ANSI STANDARDS.

GENERAL PLUMBING DEMOLITION NOTES

A. PLUMBING SYSTEMS SERVING EXISTING TO REMAIN PLUMBING FIXTURES AS IDENTIFIED ON ARCHITECTURAL DEMOLITION SHEET SHALL REMAIN INTACT AND IN GOOD WORKING ORDER.

B. AT ALL LOCATIONS WHERE PLUMBING FIXTURES ARE TO BE REMOVED, PLUMBING SUBCONTRACTOR SHALL REMOVE PIPING (WATER, WASTE, VENT) TO A POINT BEYOND FINISH SURFACE AND CAP OFF. WHERE PIPING SERVING EXISTING FIXTURE TO BE REMOVED ALSO SERVES FIXTURES THAT ARE TO REMAIN, PIPING SHALL BE REROUTED AND RECONNECTED AS REQUIRED TO ACCOMMODATE REMODELED AREAS AS REQUIRED.

C. WHERE EXISTING WALLS ARE REMOVED AND PIPING IS FOUND THAT MUST REMAIN, PLUMBING SUBCONTRACTOR SHALL REROUTE AND RECONNECT PIPING AS REQUIRED, E.G. DOMESTIC WATER PIPING, GAS, SOIL, WASTE, VENT, AND ROOF LEADER PIPING.

D. ALL PLUMBING PIPING THAT IS FOUND TO NO LONGER SERVE ANY PURPOSE SHALL BE REMOVED AND CAPPED OFF BEYOND FINISH SURFACE.

E. COORDINATE ALL REMOVED PLUMBING FIXTURES WITH G.C FOR RELOCATION OR FUTURE USE.

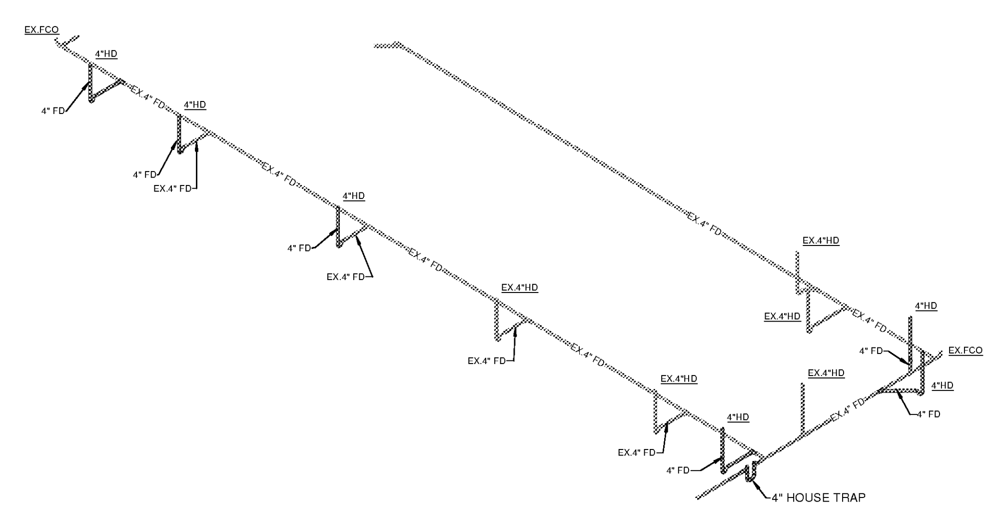

8 PLUMBING - WASTE AND VENT ISOMETRIC SANITARY AND VENT ISOMETRIC

2" REFERENCE LINE

CAPSTONE
project services llc
333 S. TAMIAMI TRAIL, STE. #293
VENICE, FL 34285

SEAL

KLH ENGINEERS
MECHANICAL/ELECTRICAL ENGINEERS
WWW.KLHENGRS.COM
LEXINGTON, KENTUCKY
LOUISVILLE, KENTUCKY
COLUMBUS, OHIO
NEW YORK, NEW YORK
1538 ALEXANDRIA PIKE, SUITE 11
FT. THOMAS, KENTUCKY 41075
800-354-9783 859-442-8050
859-442-8058 FAX

CONSULTANT

A REMODEL OR NEW CONSTRUCTION FOR:

KROGER GA-388

564 CROSSTOWN DRIVE PEACHTREE CITY, GA

PROJECT KROGER REGION

DATE 12-21-2018 CONSTRUCTION SET

SHEET TITLE PLUMBING ABBREVIATIONS, SYMBOLS, AND GENERAL NOTES

REVISIONS

MARK	DATE	DESCRIPTION

PROJECT NO: 20995
CAD DWG FILE:
DRAWN BY: ISR
CHK'D BY: KCN

SHEET NO. P0.1

OWNERSHIP OF INSTRUMENTS OF SERVICE
All reports, plans, specifications, computer files, field data, notes and other documents and instruments prepared by the Consultant as instruments of service shall remain the property of the Consultant. The Consultant shall retain all common law, statutory and other reserved rights, including, without limitation, the copyright thereto.

Order Plans @ WWW.LDILine.com