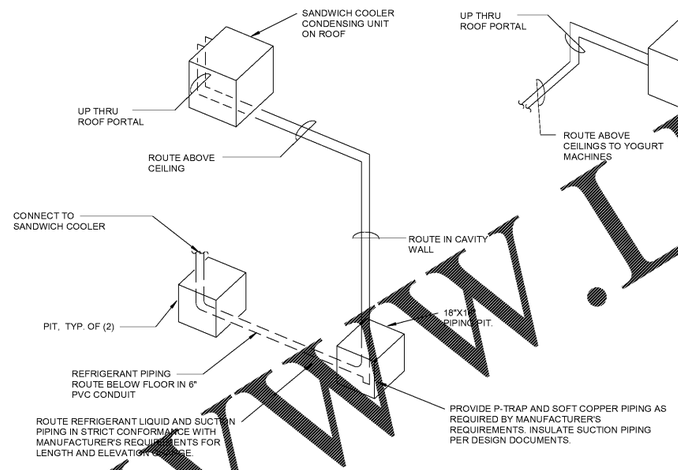


4 REFRIGERANT ROUTING DETAIL
NTS

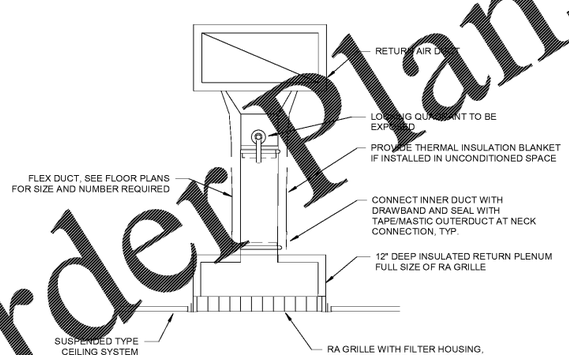


3 TYPICAL RETURN AIR GRLLE DETAIL
NTS

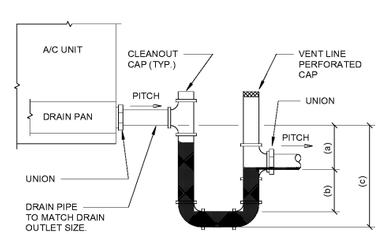


THIS STANDARD DETAIL MUST BE REVIEWED AND SITE ADAPTED BY CONTRACTOR PRIOR TO USE FOR FINAL EQUIPMENT.

NOTES:
1. ALLOW SUFFICIENT SPACE BELOW DRAIN PAN FOR TRAP.
2. PITCH DRAIN FOR PROPER RUNOFF.
3. MANUALLY PRIME FILL TRAP BEFORE START-UP TO FORM INITIAL DRAIN SEAL.
4. SUPPORT LENGTHY DRAIN LINES TO PREVENT SAG AND CONDENSATE OVERFLOW.

(a) THIS DIMENSION IN INCHES MUST BE EQUAL TO THE MAXIMUM FAN SUCTION (NEGATIVE) STATIC PRESSURE IN INCHES WG (WITH DIRTY FILTERS, COILS, AND MAXIMUM AIR FLOW) + 1" W.G.

(b) THIS DIMENSION IN INCHES MUST BE EQUAL TO MIN. 1/2 OF THE (a) ABOVE

(c) EQUALS (a) + (b) + PIPE DIA. + + INSULATION

2 DRAW THRU UNIT CONDENSATE TRAP
NTS

NOTE:
CONTRACTOR SHALL FIELD FABRICATE DIFFUSER EXTENSION AS REQUIRED

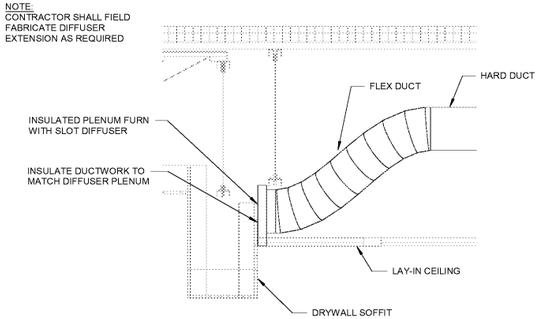


1 SLOT DIFFUSER DETAIL
NTS

Order Plans @ www.LDILine.com

**RaceTrac**
COPYRIGHT NOTICE
THESE PLANS ARE SUBJECT TO FEDERAL COPYRIGHT LAWS: ANY USE OF SAME WITHOUT THE EXPRESSED WRITTEN PERMISSION OF RACETRAC PETROLEUM, INC. IS PROHIBITED. 2016 RACETRAC PETROLEUM INC.

DESIGN PROFESSIONALS

HILLFOLEYROSSI & ASSOCIATES
ARCHITECTURE
ENGINEERING
3680 Pleasant Hill Road
Suite 200
Duluth, Georgia 30096
p 770.622.9858
f 770.622.9535
www.hillfoleyrossi.com

© Copyright (as dated below)
This drawing and all reproductions thereof are the property of Hill Foley Rossi & Associates, LLC (HFR). It is intended for the sole use of the project named herein. Reproduction without the written consent of HFR is unlawful. All copies are to be returned to HFR upon project completion.

ISSUE/REVISION RECORD

| DATE | DESCRIPTION |
|---|---|
| 09/04/18 | ISSUED FOR PERMIT |

**RaceTrac**

RACETRAC PETROLEUM, INC.
200 GALLERIA PARKWAY SOUTHEAST
SUITE 900
ATLANTA, GEORGIA 30339
(770) 431-7600

PROJECT NAME

**PEACHTREE PKWY & ENG.**

**PEACHTREE CORNERS**
**5780 PEACHTREE PKWY**
**PEACHTREE CORNERS, GA**

RACETRAC STORE NUMBER
**1201**

PROTOTYPE SERIES 5.5K 2.0
**2018 RH MO**

PLAN MODIFICATION NOTICE

| SPB NO. | DATE |
|---|---|

STANDARD PLAN BULLETINS (SPB) MODIFY THE PROTOTYPE SERIES SET NOTED ABOVE. THE LISTED SPB REPRESENTS THE LATEST MODIFICATION INCORPORATED TO THIS PROTOTYPE SERIES SET AT ORIGINAL RELEASE. THE ISSUE/ REVISION RECORD COLUMN ABOVE LISTS ANY REVISIONS OR SPB INCORPORATED IN THIS SET AFTER THE ORIGINAL RELEASE. CONTACT RACETRAC ENGINEERING AND CONSTRUCTION FOR ANY SUBSEQUENT BULLETINS NOT INCORPORATED HEREIN.

PROFESSIONAL SEAL

09/04/18

PROJECT NUMBER
18.703.00

SHEET TITLE

**MECHANICAL DETAILS**

SHEET NUMBER

**M431**