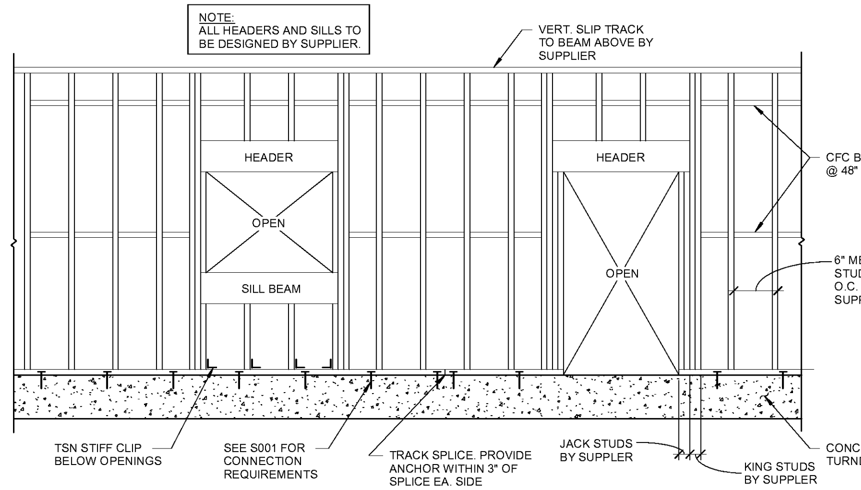

15 TYP. WALL ELEVATION
3/8" = 1'-0"

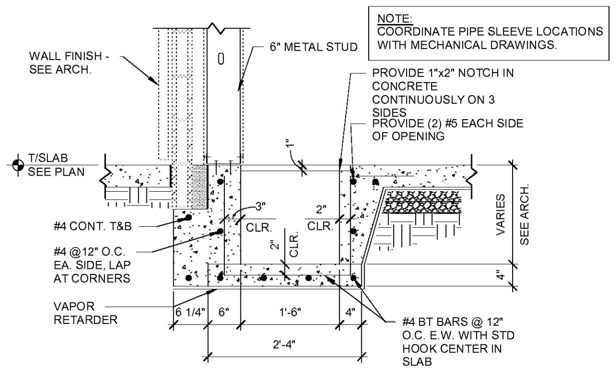

14 PIT DETAIL
3/4" = 1'-0"

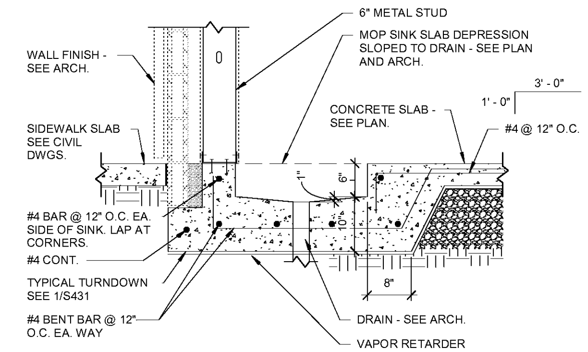

13 SLAB OPENING MOP SINK DETAIL
3/4" = 1'-0"

CONCRETE REINFORCING LAP LENGTHS

BAR SIZE	TENSION LAP SPLICE CLASS "A"	TENSION LAP SPLICE CLASS "B"	COMPRESSION SPLICE
#4	22"	29"	11"
#5	28"	36"	14"
#6	33"	43"	17"

MASONRY LAP SPLICE TABLE

	ALLOWABLE STRESS (100% STRESS)
BAR SIZE	MIN. LAP LENGTH
#4	36"
#5	45"
#6	54"

12 REINFORCING LAP SCHEDULES
3/4" = 1'-0"

BRICK LINTEL SCHEDULE

MASONRY OPENING WIDTH		
MINIMUM	MAXIMUM	BRICK ANGLE
————	4'-0"	6 x 4 x 5/16" ANGLE, LLH
4'-1"	8'-6"	6 x 6 x 5/16" ANGLE
8'-7"	11'-4"	6 x 6 x 3/8" ANGLE

GENERAL NOTES:
1. THIS SCHEDULE DOES NOT ACCOUNT FOR CONCENTRATED LOADS ON LINTELS. SEE ADDITIONAL DETAILS FOR LINTELS SUPPORTING CONCENTRATED LOADS.

BRICK ANGLE NOTES:
1. PROVIDE 4" MINIMUM BEARING AT EACH END.

11 BRICK LINTEL SCHEDULE
3/4" = 1'-0"

NOTE:
COORDINATE PIPE SLEEVE LOCATIONS WITH MECHANICAL DRAWINGS.

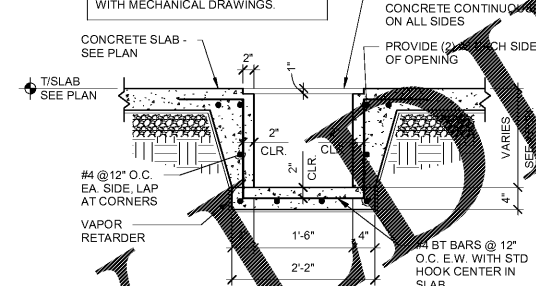

10 PIT DETAIL
3/4" = 1'-0"

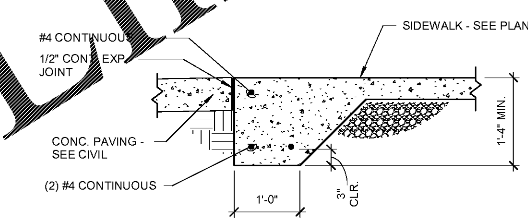

9 TYPICAL EXTERIOR SLAB TURNDOWN
3/4" = 1'-0"

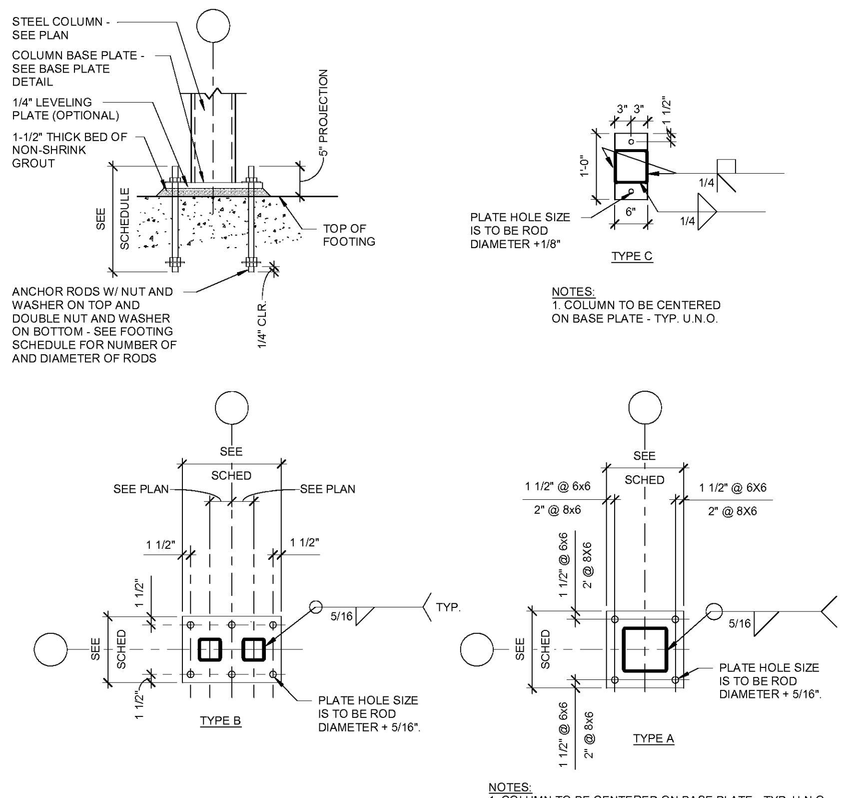

8 TYPICAL BASE PLATE DETAILS
3/4" = 1'-0"

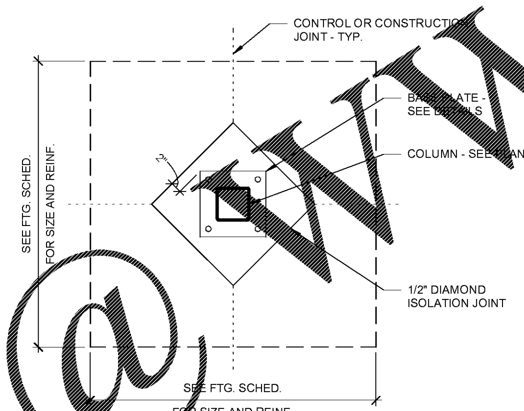

7 TYPICAL COLUMN ISOLATION JOINT
3/4" = 1'-0"

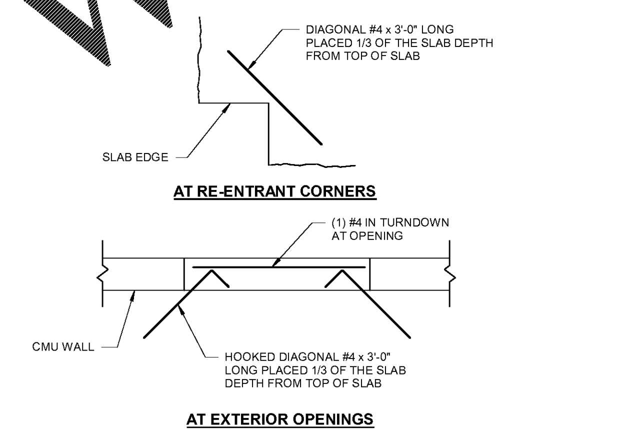

6 TYPICAL FLOOR SLAB REINFORCING AT CORNERS
3/4" = 1'-0"

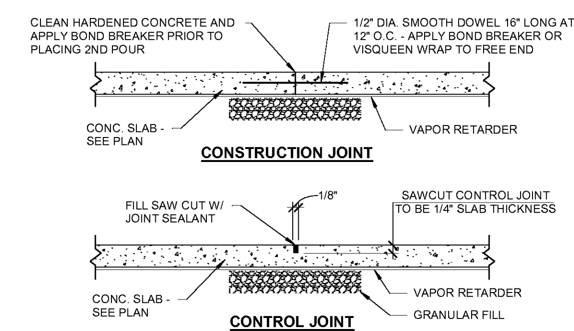

NOTES:
SAW CUT CONCRETE AS SOON AS SLAB CAN SUPPORT WEIGHT.
CONTROL JOINTS MAY BE REPLACED WITH CONSTRUCTION JOINTS.
REFER TO GENERAL NOTES ON SHEET S000 FOR TYPICAL JOINT SPACING REQUIREMENTS.

5 TYPICAL FLOOR SLAB JOINT DETAILS
3/4" = 1'-0"

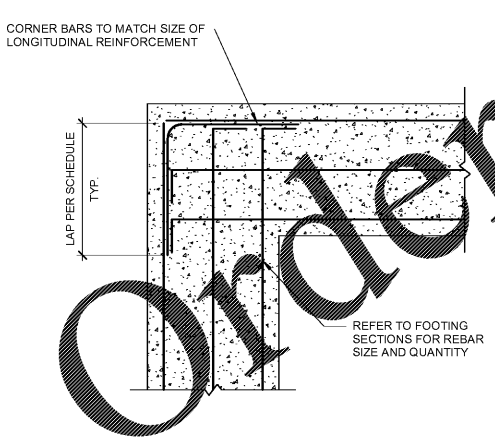

4 TYPICAL FOOTING CORNER DETAIL
3/4" = 1'-0"

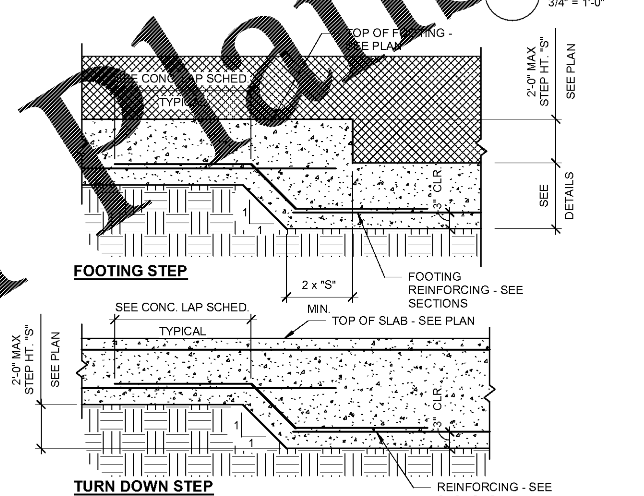

3 TYPICAL FOOTING AND TURN DOWN STEP DETAIL
3/4" = 1'-0"

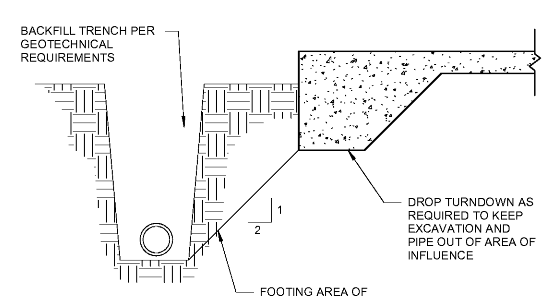

2 TYPICAL TRENCH ADJACENT TO FOOTING
3/4" = 1'-0"

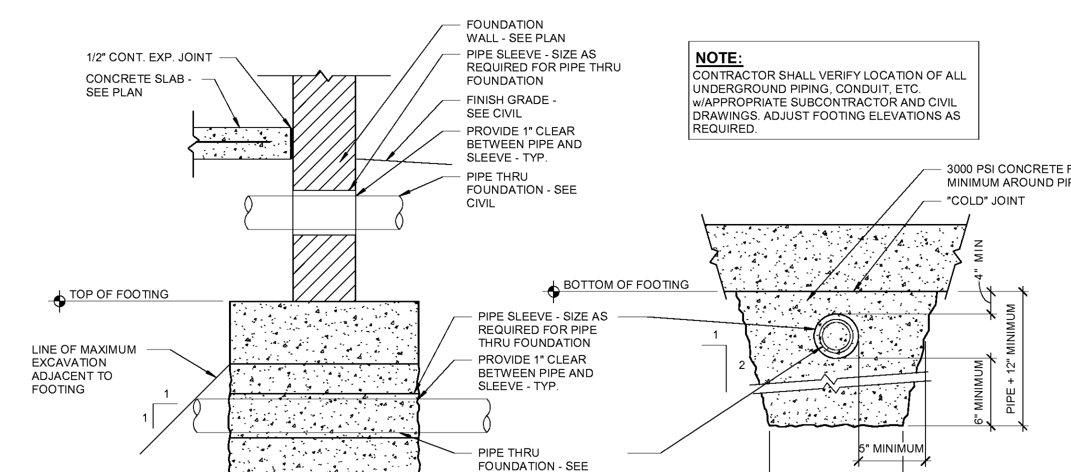

NOTE:
CONTRACTOR SHALL VERIFY LOCATION OF ALL UNDERGROUND PIPING, CONDUIT, ETC. w/APPROPRIATE SUBCONTRACTOR AND CIVIL DRAWINGS. ADJUST FOOTING ELEVATIONS AS REQUIRED.

1 TYPICAL PIPE AT FOUNDATION / WALL DETAIL
3/4" = 1'-0"

Order Plans @ WWW.LDILine.com

RaceTrac
COPYRIGHT NOTICE
THESE PLANS ARE SUBJECT TO FEDERAL COPYRIGHT LAWS: ANY USE OF SAME WITHOUT THE EXPRESSED WRITTEN PERMISSION OF RACETRAC PETROLEUM, INC. IS PROHIBITED. 2016 RACETRAC PETROLEUM INC.

DESIGN PROFESSIONALS
HILLFOLEYROSSI & ASSOCIATES
ARCHITECTURE
ENGINEERING
3680 Pleasant Hill Road
Suite 200
Duluth, Georgia 30096
p 770.622.9858
f 770.622.9535
www.hillfoleyrossi.com

© Copyright (as dated below).
This drawing and all reproductions thereof are the property of Hill Foley Rossi & Associates, LLC.(HFR). It is intended for the sole use of the project named hereon. Reproduction without the written consent of HFR is unlawful. All copies are to be returned to HFR upon project completion.

ISSUE/REVISION RECORD

DATE	DESCRIPTION
09/04/18	ISSUED FOR PERMIT

RaceTrac
RACETRAC PETROLEUM, INC.
200 GALLERIA PARKWAY SOUTHEAST
SUITE 900
ATLANTA, GEORGIA 30339
(770) 431-7600

PROJECT NAME
PEACHTREE PKWY & ENG.

PEACHTREE CORNERS
5780 PEACHTREE PKWY
PEACHTREE CORNERS, GA

RACETRAC STORE NUMBER
1201

PROTOTYPE SERIES 5.5K 2.0
2018 RH MO

PLAN MODIFICATION NOTICE
SPB NO. DATE

STANDARD PLAN BULLETINS (SPB) MODIFY THE PROTOTYPE SERIES SET NOTED ABOVE. THE LISTED SPB REPRESENTS THE LATEST MODIFICATION INCORPORATED TO THIS PROTOTYPE SERIES SET AT ORIGINAL RELEASE. THE ISSUE/ REVISION RECORD COLUMN ABOVE LISTS ANY REVISIONS OR SPB INCORPORATED IN THIS SET AFTER THE ORIGINAL RELEASE. CONTACT RACETRAC ENGINEERING AND CONSTRUCTION FOR ANY SUBSEQUENT BULLETINS NOT INCORPORATED HEREIN.

PROFESSIONAL SEAL
GEORGIA REGISTERED No. 017070 PROFESSIONAL PATRICK REED FOLEY
09/04/18

PROJECT NUMBER
18.703.00

SHEET TITLE
TYPICAL DETAILS

SHEET NUMBER
S430

ISSUED FOR PERMIT