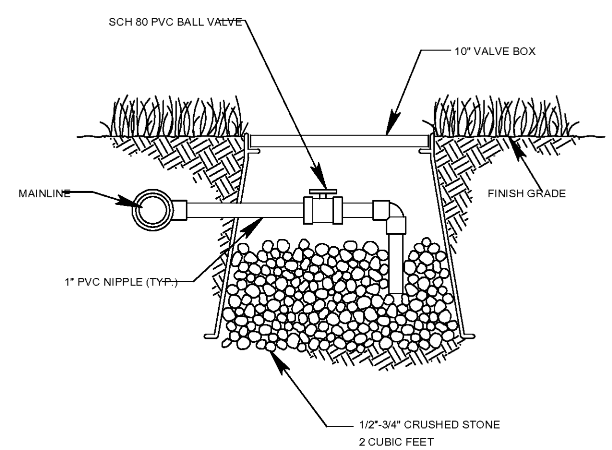

1 L2.2 MANUAL DRAIN VALVE
NTS

NOTE: INSTALLER OF SLEEVES SHALL BE RESPONSIBLE TO LOCATE SLEEVES IF NOT PROPERLY INSTALLED.

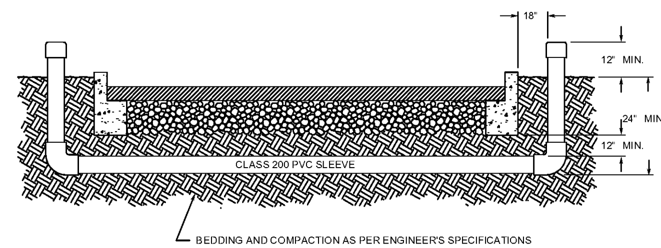

2 L2.2 SLEEVING
NTS

CONTRACTOR TO COMPLY WITH ALL LOCAL CODES AND ORDINANCES IN REFERENCE TO THE INSTALLATION OF PVC PIPING AND LOW VOLTAGE WIRING.

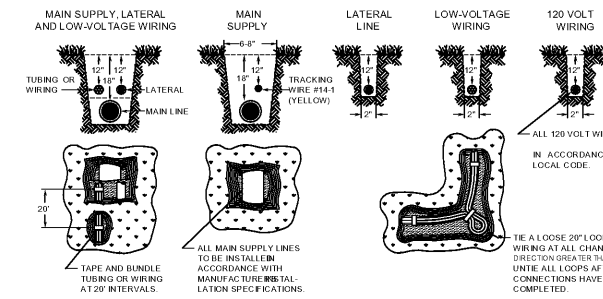

3 L2.2 TRENCHING
NTS

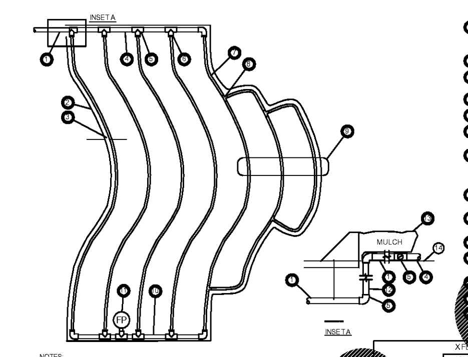

1. PVC SUPPLY PIPE FROM RAIN BIRD CONTROL ZONE KIT (SIZED TO MEET LATERAL FLOW DEMAND)
2. PERIMETER OF AREA
3. PERIMETER DRIPLINE PIPE TO BE INSTALLED 2"-4" FROM PERIMETER OF AREA
4. PVC SUPPLY MANIFOLD
5. PVC SCH 40 TEE OR EL (TYPICAL)
6. BARB X MALE FITTING: RAIN BIRD XFD-MA FITTING (TYPICAL)
7. ON-SURFACE DRIPLINE: RAIN BIRD XF SERIES DRIPLINE (TYPICAL) POTABLE: XFD DRIPLINE NON-POTABLE: XFDP DRIPLINE
8. BARB X BARB INSERT TEE: RAIN BIRD XFD-TEE (TYPICAL)
9. TOTAL LENGTH OF SEL[illegible] SHOULD NOT EXCEED LENGTH SHOWN IN TABLE
10. PVC FLUSH HEADER
11. FLUSH POINT: [illegible] BIRD DE[illegible] XFD FLUSH POINT"
12. PVC R[illegible] PIPE
13. 4" DEPTH OF MULCH
14. FINISH GRADE

NOTES:
1. DISTANCE BETWEEN LATERAL ROWS AND EMITTER SPACING TO BE BASED ON SOIL TYPE, PLANT MATERIALS AND CHANGES IN ELEVATION. **SEE INSTALLATION SPECIFICATIONS ON RAIN BIRD WEB SITE (WWW.RAINBIRD.COM) FOR SUGGESTED SPACING.**
2. LENGTH OF LONGEST DRIPLINE LATERAL SHOULD NOT EXCEED THE MAXIMUM SPACING SHOWN IN THE ACCOMPANYING TABLE.
3. PLACE TIE DOWN STAKES EVERY THREE FEET IN SAND, [illegible] FEET IN LOAM, AND FIVE FEET IN CLAY.
4. AT FITTINGS WHERE THERE IS A CHANGE OF DIRECTION SUCH AS TEES OR ELBOWS, USE TIE-DOWN STAKES ON EACH LEG OF THE CHANGE OF DIRECTION.

XF[illegible] Maximum Lateral Lengths (Feet)

PSI	12" Spacing 0.6 GPH	12" Spacing 0.9 GPH	18" Spacing 0.6 GPH	18" Spacing 0.9 GPH	24" Spacing 0.6 GPH	24" Spacing 0.9 GPH
15	273	155	314	250	424	322
[illegible]	[illegible]	169	353	294	508	368
[illegible]	[illegible]	230	413	350	586	414
[illegible]	395	255	465	402	652	474
[illegible]	417	285	528	420	720	488
[illegible]	460	290	596	455	780	512

[illegible] USING 17MM INSERT FITTINGS WITH DESIGN PRESSURE OVER 50PSI, IT IS RECOMMENDED THAT STAINLESS STEEL CLAMPS BE INSTALLED ON EACH FITTING.

4 L2.2 MANUAL DRAIN VALVE
NTS

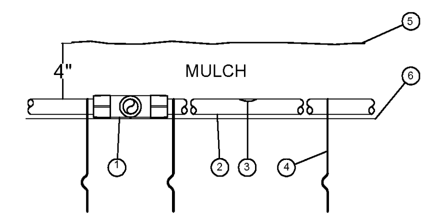

1. EASY FIT COMPRESSION TEE: RAIN BIRD MDCFTEE
2. ON-SURFACE DRIPLINE: RAIN BIRD XF SERIES DRIPLINE POTABLE: XFD DRIPLINE NON-POTABLE: XFDP DRIPLINE
3. INLINE DRIP EMITTER OUTLET
4. TIE DOWN STAKE: RAIN BIRD TDS-050 WITH BEND (TYPICAL)
5. MULCH
6. FINISH GRADE

NOTES:
1. PLACE TIE DOWN STAKES EVERY THREE FEET IN SAND, FOUR FEET IN LOAM, AND FIVE FEET IN CLAY.
2. AT FITTINGS WHERE THERE IS A CHANGE OF DIRECTION SUCH AS TEES OR ELBOWS, USE TIE-DOWN STAKES ON EACH LEG OF THE CHANGE OF DIRECTION.

5 L2.2 LANDSCAPE DRIPLINE ON GRADE
NTS

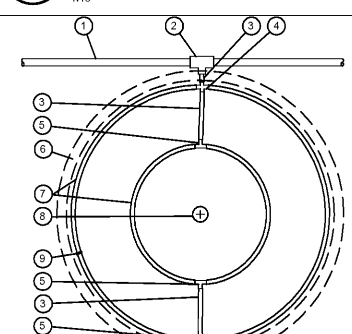

1. PVC DRIP MANIFOLD PIPE
2. PVC SCH 40 TEE OR EL
3. 1/2 POLYETHYLENE TUBING: RAIN BIRD XF SERIES BLANK TUBING
4. BARB CROSS INSERT FITTING: RAIN BIRD XFD-CROSS
5. BARB TEE INSERT FITTING: RAIN BIRD XFD-TEE
6. SHOVEL CUT BED EDGE
7. ON-SURFACE DRIPLINE: RAIN BIRD XF SERIES DRIPLINE POTABLE: XFD DRIPLINE NON-POTABLE: XFDP DRIPLINE PLACE AS SHOWN (LENGTH AS REQUIRED)
8. TREE TRUNK
9. TIE DOWN STAKE: RAIN BIRD TDS-050 WITH BEND (QUANTITY AS REQUIRED, SEE NOTES 2-3 BELOW)

NOTES: (THIS DETAIL IS FOR TREES LOCATED OUTSIDE OF PLANTING AREAS ONLY)
1. DISTANCE BETWEEN LATERAL RINGS AND EMITTER SPACING TO BE BASED ON SOIL TYPE, AND TREE CANOPY. SEE INSTALLATION SPECIFICATIONS ON RAIN BIRD WEB SITE (WWW.RAINBIRD.COM) FOR SUGGESTED SPACING.
2. PLACE TIE DOWN STAKES EVERY THREE FEET IN SAND, FOUR FEET IN LOAM, AND FIVE FEET IN CLAY.
3. AT FITTINGS WHERE THERE IS A CHANGE OF DIRECTION SUCH AS TEES OR ELBOWS, USE TIE-DOWN STAKES ON EACH LEG OF THE CHANGE OF DIRECTION.

6 L2.2 DRIP LAYOUT AROUND TREES IN TURF AREA
NTS

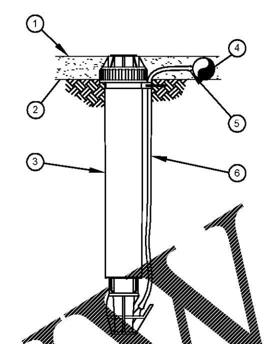

1. MULCH
2. F[illegible] GRADE
3. MIC[illegible] SPRAY POP-UP: RA[illegible] RD XERI-POP XP-600X WI[illegible] VAN NOZZLE
4. ON-SUR[illegible] DRIPLINE: RAIN BI[illegible] SERIES DRIPLINE POTABLE[illegible] SERIES NON-POTAB[illegible] XFDP SERIES
5. ¼" BARB TRA[illegible] FITTINGS: RAIN BIRD X[illegible]
6. ¼" DISTRIBUTION TUBING: RAIN BIRD X[illegible] TUBING (LE[illegible] AS REQUIRED)

[illegible]OTE:
1. USE XERIMAN TOO[illegible] OOL TO INSERT BARB TRANSFER FITTING DIRECTLY I[illegible] DRIPLINE TUBING.
2. [illegible]VAN NOZZLE MAY BE SET [illegible] O CLOSED, OR IF IT IS DESIRED TO SEE SPRAY FROM THE NOZZLE, SET THE ARC TO ¼ PATTERN. THE FLOW FROM THE NOZZLE, 0.3 GPM, SHOULD BE ACCOUNTED FOR IN THE SYSTEM DESIGN.

7 L2.2 DRIPLINE OPERATION INDICATOR
NTS

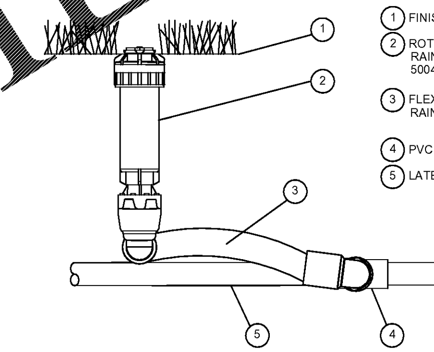

1. FINISH GRADE
2. ROTOR POP-UP SPRINKLER: RAIN BIRD 5004-MPR-25/30/35-Q/T/H/TT/TQ/F
3. FLEXABLE SWING ASSEMBLY: RAIN BIRD SPX-FLEX-100
4. PVC SCH 40 TEE OR ELL
5. LATERAL PIPE

8 L2.2 ROTOR POP-UP SPRINKLER:5004-MPR NOZZLE
NTS

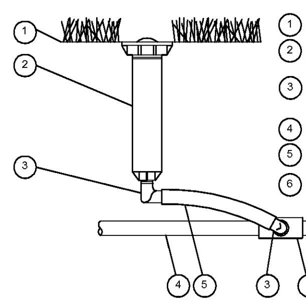

1. FINISH GRADE
2. POP-UP SPRAY SPRINKLER: RAIN BIRD 1804-PRS WITH RAIN BIRD ROTARY NOZZLE (AS INDICATED ON L-2.1)
3. 1/2-INCH MALE NPT x .490 INCH BARB ELBOW: RAIN BIRD MODEL SBE-050
4. PVC LATERAL PIPE
5. FLEXABLE SWING ASSEMBLY: RAIN BIRD MODEL SPX-FLEX-100
6. PVC SCH 40 TEE OR ELL

9 L2.2 ROTORY NOZZLE: 1804 POP-UP SPRAY SPRINKLER
NTS

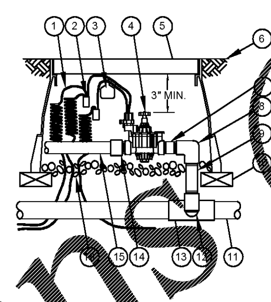

1. 30-INCH LINEAR LENGTH OF WIRE, COILED
2. WATERPROOF CONNECTION: RAIN BIRD SPLICE-1 (1 OF 2)
3. ID TAG: RAIN BIRD VID SERIES
4. REMOTE CONTROL VALVE: RAIN BIRD PGA
5. VALVE BOX WITH COVER: RAIN BIRD VB-STD
6. FINISH GRADE/TOP OF MULCH
7. PVC SCH 80 NIPPLE (CLOSE)
8. PVC SCH 40 ELL
9. PVC SCH 80 NIPPLE (LENGTH AS REQUIRED)
10. BRICK (1 OF 4)
11. PVC MAINLINE PIPE
12. SCH 80 NIPPLE (2-INCH LENGTH, HIDDEN) AND SCH 40 ELL
13. PVC SCH 40 TEE OR ELL
14. PVC SCH 40 MALE ADAPTER
15. PVC LATERAL PIPE
16. 3.0-INCH MINIMUM DEPTH OF 3/4-INCH WASHED GRAVEL

10 L2.2 TURF VALVE PGA-PRS-D
NTS

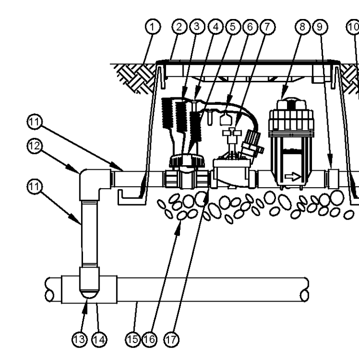

1. FINISH GRADE/TOP OF MULCH
2. VALVE BOX WITH COVER: RAIN BIRD VB-STD
3. 30-INCH LINEAR LENGTH OF WIRE, COILED
4. WATERPROOF CONNECTION: RAIN BIRD DB SERIES
5. 1-INCH BALL VALVE (INCLUDED IN XCZ-PRB-100-COM KIT)
6. ID TAG
7. REMOTE CONTROL VALVE: RAIN BIRD PESB (INCLUCED IN XCZ-PRB-100-COM KIT)
8. PRESSURE REGULATING QUICK CHECK BASKET FILTER: RAIN BIRD PRB-QKCHK-100 (INCLUDED IN XCZ-PRB-100-COM KIT)
9. PVC SCH 40 FEMALE ADAPTOR
10. LATERAL PIPE
11. PVC SCH 80 NIPPLE (LENGTH AS REQUIRED)
12. PVC SCH 40 ELL
13. PVC SCH 80 NIPPLE (2-INCH LENGTH, HIDDEN) AND PVC SCH 40 ELL
14. PVC SCH 40 TEE OR ELL
15. MAINLINE PIPE
16. 3-INCH MINIMUM DEPTH OF 3/4-INCH WASHED GRAVEL
17. PVC SCH 80 NIPPLE, CLOSE (INCLUDED IN XCZ-PRB-100-COM KIT)

11 L2.2 DRIP VALVE:XCZ-PRB-100-B-COM
NTS

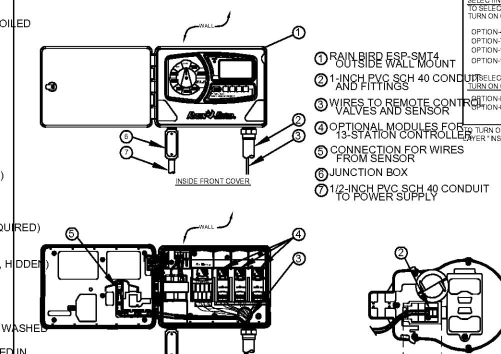

1. RAIN BIRD ESP-SMT4 OUTSIDE WALL MOUNT
2. 1-INCH PVC SCH 40 CONDUIT AND FITTINGS
3. WIRES TO REMOTE CONTROL VALVES AND SENSOR
4. OPTIONAL MODULES FOR 13-STATION CONTROLLER
5. CONNECTION FOR WIRES FROM SENSOR
6. JUNCTION BOX
7. 1/2-INCH PVC SCH 40 CONDUIT TO POWER SUPPLY

CHOOSING CONTROLLER FEATURES

SELECTING THE MODEL
TO SELECT THE DESIRED MODEL TURN ON ONE OF THE FOLLOWING LAYERS:
OPTION-4-STATION
OPTION-7-STATION
OPTION-10-STATION
OPTION-13-STATION

TO SELECT "INDOOR" OR "OUTDOOR" OPTION, TURN ON ONE OF THE FOLLOWING LAYERS
OPTION-INDOOR
OPTION-OUTDOOR

TO TURN OFF THIS INSTRUCTION BOX, TURN OFF LAYER "INSTRUCT-OPTION".

1. ESP-SMT SENSOR (BOTTOM VIEW)
2. CONNECTION FOR WIRES FROM CONTROLLER

NOTE: WIRE LENGTH FROM CONTROLLER TO SENSOR NOT TO EXCEED 200 FEET.

12 L2.2 SMART CONTROLLER:ESP-SMT
NTS

13 L2.2 MAIN LINE/LATERAL LINE LOCATION ADJACENT TO DRIVE ISLE
NTS

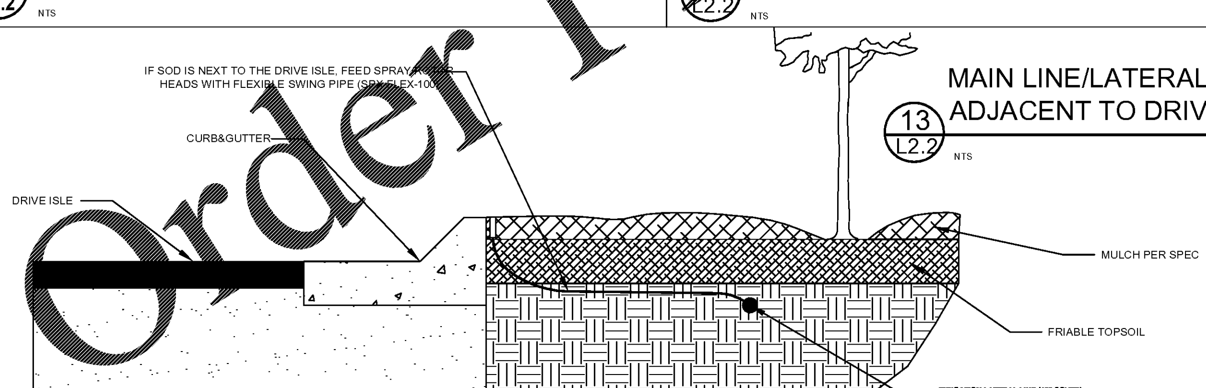

14 L2.2 HILLSIDE IRRIGATION RISER DETAIL
NTS

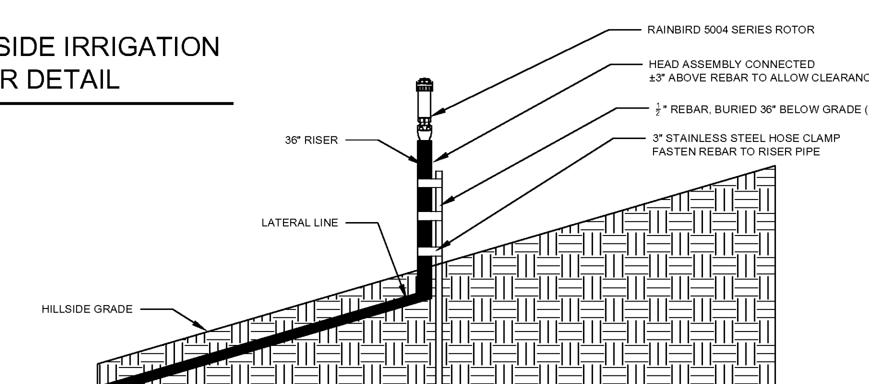

Order Plans @ www.LDLine.com

NO.	REVISED	DATE
		02/26/2018

Columbia Engineering
2862 BUFORD HIGHWAY
SUITE 200
DULUTH, GEORGIA 30096
(770) 925-0357

THESE PLANS ARE SUBJECT TO FEDERAL COPYRIGHT LAWS: ANY USE OF SAME WITHOUT THE EXPRESSED WRITTEN PERMISSION OF RACETRAC PETROLEUM, INC. IS PROHIBITED.

RACETRAC PETROLEUM, INC.
3225 CUMBERLAND BOULEVARD
SUITE 100 ATLANTA, GA 30339
(770) 431-7600

IRRIGATION DETAILS

PEACHTREE CORNERS RACETRAC

5780 PEACHTREE CORNERS PARKWAY
PEACHTREE CORNERS, GEORGIA
GWINNETT COUNTY
DIST. 6, LL 284, PAARCELS: 6-284-16,18,40,56

DRAWN-BY	JPB
DATE	02/23/2018
SCALE	1"=40'
DRAWING NAME: 4607.00	
L-2.2	1
SHEET NO.	VERSION