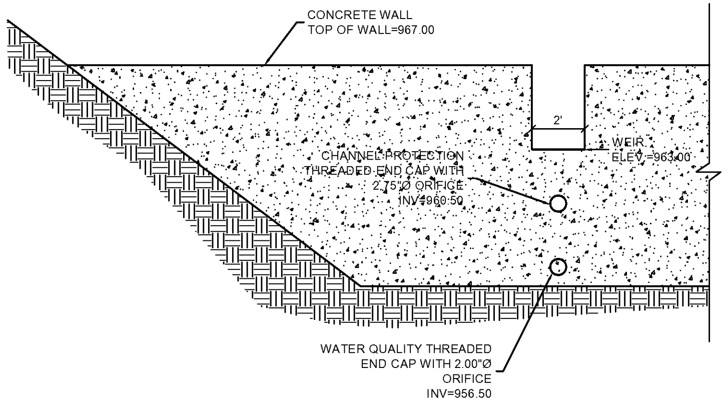

OUTLET CONTROL STRUCTURE AT DETENTION POND CONCRETE WALL

SCALE:NTS

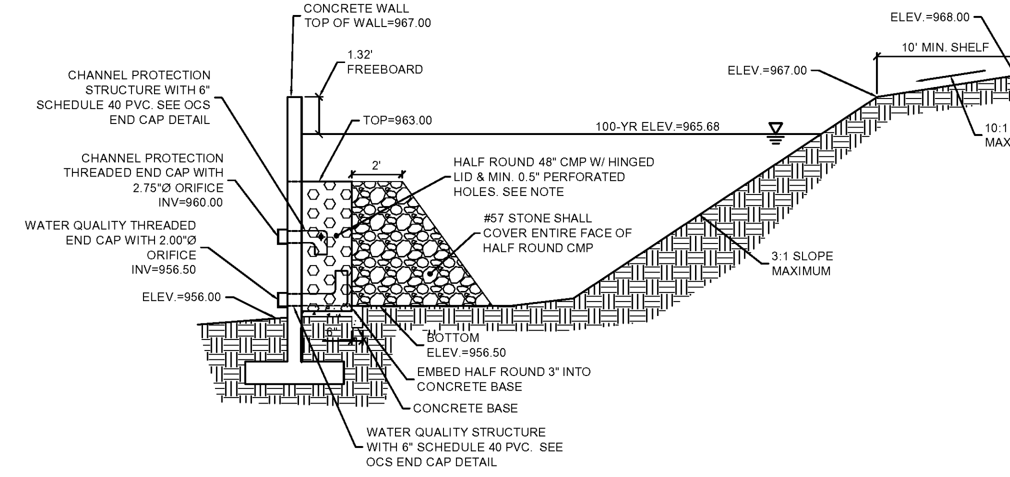

NOTE:
ATTACH HALF ROUND CMP TO STRUCTURE WHERE CONTACT OCCURS WITH L-BRACKETS 6" OC VERTICAL WELDED TO THE FULL ROUND AND EPOXY-BOLTED INTO THE CONCRETE STRUCTURE

DETENTION POND CROSS SECTION

SCALE:NTS

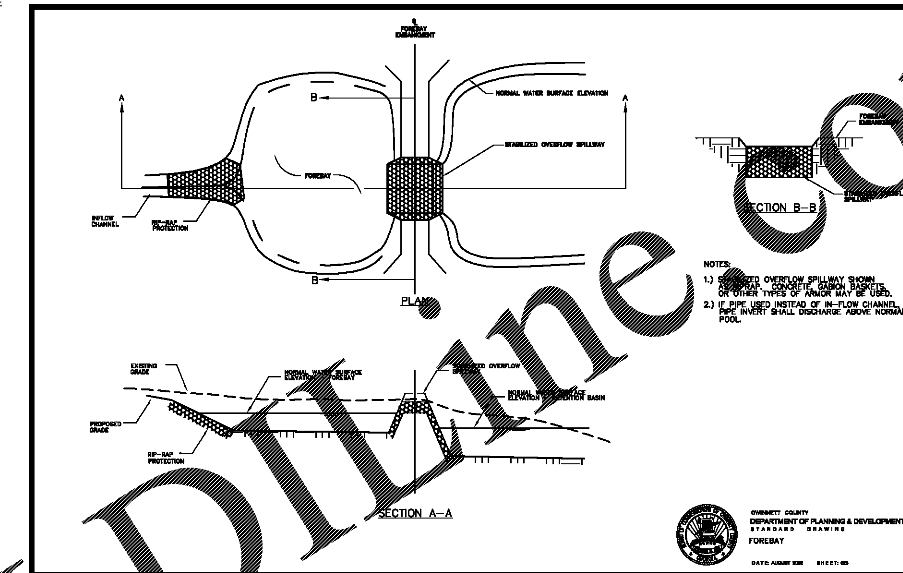

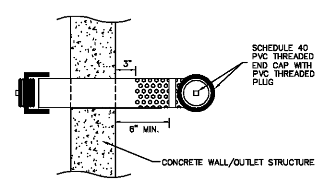

WATER QUALITY PLAN VIEW (AERIAL VIEW)

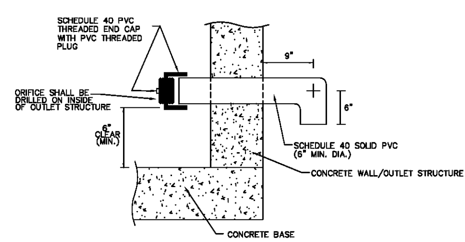

CHANNEL PROTECTION (CP) ORIFICE END-CAP

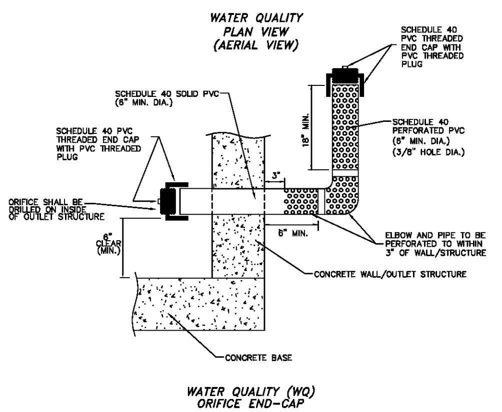

WATER QUALITY (WQ) ORIFICE END-CAP

NOTES (TO APPLY TO ALL):

1.) FILL GAP BETWEEN STRUCTURE & PVC WITH MORTAR OR INSTALL A FERNCO ADAPTER.
2.) SIZE ORIFICE AS REQUIRED
3.) PIPE SIZE SHALL BE SPECIFIED PER TABLE BELOW. PIPE SIZES SHALL BE CONSISTENT FOR EACH END-CAP ASSEMBLY.
4.) VARIATIONS TO THIS DETAIL MAY BE ACCEPTABLE ON A CASE BY CASE BASIS. MODIFICATIONS SHALL BE SUBJECT TO REVIEW AND APPROVAL BY THE STORMWATER DEPARTMENT.

OUTLET ORIFICE DIAMETER	PIPE SIZE
<3"	6"
3" TO <5"	8"
5" TO <11"	12"

REVISION #1: DECEMBER 3RD 2004
REVISION #2: MARCH 15TH 2005
REVISION #3: MAY 2ND 2005
REVISION #4: JUNE 27TH 2006

GWINNETT COUNTY
DEPARTMENT OF PLANNING & DEVELOPMENT
STANDARD DRAWING
ORIFICE END-CAP DETAILS
DATE: NOVEMBER 2002 SHEET: 829

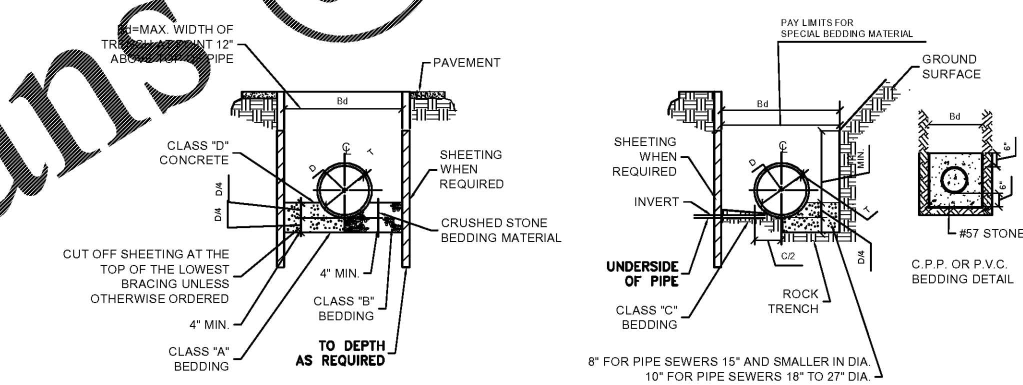

NOTES:

1. FOR PIPES WITH BELLS, BELL HOLES SHALL BE EXCAVATED.
2. FOUNDATION SHALL BE SHAPED TO FIT PIPE EXTERIOR
3. TRENCH SLOPING SHALL NOT BEGIN UNTIL 12 INCHES ABOVE THE TOP OF THE PIPE COMPACTION: THE BACKFILL OF ALL TRENCHES SHALL BE COMPACTED PER SPECIFICATIONS. BACKFILL MATERIAL SHALL BE FREE OF ROOTS, STUMPS OR OTHER FOREIGN DEBRIS AND SHALL BE PLACED AT OR NEAR OPTIMUM MOISTURE. ALL O.S.H.A. REGULATIONS MUST BE COMPLIED WITH AT ALL TIMES DURING CONSTRUCTION

ASTM - 3034 DR 35 P.V.C. PIPE

D IN	T IN	Bd FT
6	0.18	2.52
8	0.24	2.70
10	0.30	2.88
12	0.36	3.04
15	0.437	3.28

AWWA C - 900 PVC OR DUCTILE IRON PIPE (DIP)

D IN	T IN	Bd FT	C FT
6	0.38	2.00	0.41
8	0.42	2.09	0.53
10	0.48	2.26	0.65
12	0.52	2.43	0.78

ASTM F 405 & F 667 SMOOTH WALL CORRUGATED POLYETHYLENE PIPE

D IN	T IN	Bd FT	
8		1.5	2.42
10		2	2.67
12		2.2	2.87
15		2.7	3.70
18		3.5	4.08
24		4.4	4.73
30		6.0	5.50
36		6.0	6.00

ASTM C 76 REINFORCED CONCRETE PIPE (RCP)

D IN	T IN	Bd ft	c ft
12	2	2.67	0.95
15	2 1/4	3.62	1.15
18	2 1/2	3.92	1.35
24	3	4.50	1.75
30	3 1/2	5.08	2.20
36	4	5.67	2.60
42	4 1/2	6.25	3.00
48	5	6.83	3.50
54	5 1/2	7.42	3.70
60	6	8.00	4.25
66	6 1/2	8.58	4.65
72	7	9.17	5.07

UTILITY TRENCHING

SCALE:NTS U28

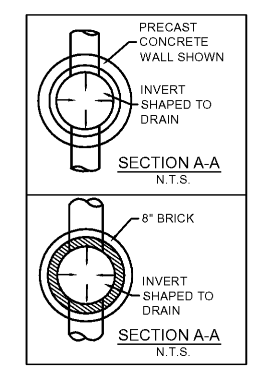

NOTE: "A" DURING CONSTRUCTION CONTRACTOR SHALL LEAVE OUT BRICK AT SUBGRADE LEVEL TO ALLOW WEEP-HOLES FOR DRAINAGE AFTER PLACEMENT OF BASE & PAVEMENT BRICKS SHALL BE GROUTED IN TO CLOSE WEEP-HOLES.

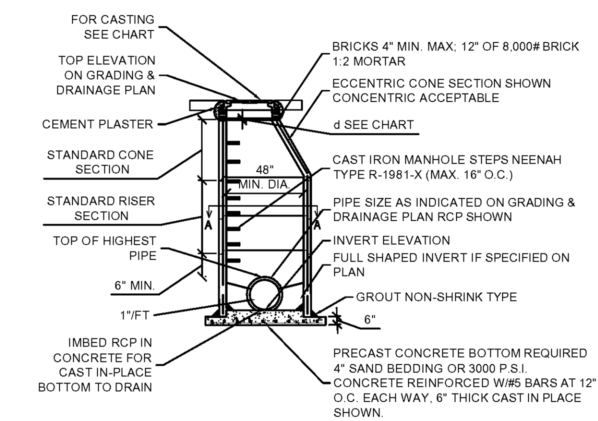

DRAINAGE STRUCTURE NOTES:

1. DETAILS SHOWN ARE MINIMUM STANDARDS. STANDARDS REQUIRED BY JURISDICTIONAL AGENCIES SHALL SUPERSEDE DETAILS SHOWN ON THIS DRAWING AND SHALL BE UTILIZED DURING CONSTRUCTION. CONTRACTOR SHALL OBTAIN APPROVAL FROM THE INSPECTOR FOR JURISDICTIONAL AGENCIES PRIOR TO ORDERING OR INSTALLING DETAILS SHOWN.
2. DURING CONSTRUCTION, CONTRACTOR SHALL LEAVE OUT BRICK AT SUBGRADE LEVEL.
3. DETAILS SHOWN INCLUDE BLOCK/BRICK OR PRECAST CONCRETE DRAINAGE STRUCTURES. EITHER STRUCTURE CAN BE ON A PRECAST OR CAST-IN PLACE BOTTOM AS SHOWN. INVERTS OF STRUCTURES SHALL BE CONSTRUCTED SO THAT THEY DRAIN TO PIPE OUTLET.
4. TOP SLAB ON SHALLOW STRUCTURES CAN BE CAST-IN-PLACE WITH REINFORCING AS SHOWN OR PRECAST TO WITHSTAND H-20 TRUCK LOADING.

DIMENSION CHART FOR BRICK OR PRECAST MANHOLE OR INLET

CASTING	INSIDE TOP DIMENSION	APPLICATION	GRATE OPEN AREA	I.D.
R-1773A	27-1/2" CIRCULAR	STORM MANHOLE	N/A	M.H.
R-3015 TYPE A	23" x 16"	CURB INLET	1.0 sf	C.I.
R-2501 TYPE G	26" CIRCULAR	STANDARD INLET	1.1 sf	D.I.
R-4810 TYPE C	24" X 24" SQUARE	STANDARD INLET	1.5 sf	D.I.
R 2580-C TYPE G	38" CIRCULAR	LARGE CAPACITY INLET	3.0 sf	L.I.
R-4882-A TYPE A	34" X 34" SQUARE	LARGE CAPACITY INLET	2.8 sf	L.I.
R-4343	21" X 24"	DROP INLET (DITCH OR NON-PAVEMENT)	2.4 sf	

DEPTH "D"	BOX DIMENSIONS "W"
0' TO 4'	
4' AND UP (EXCLUDING DOUBLE GRATE INLET	4' MIN. UP TO 36" CMP (24" RCP) DIA. PIPE. DIA. OF LARGEST PIPE PLUS 1'-0" FOR PIPES LARGER THAN 36" CMP (24" RCP) CMP (2'-0" RCP)
GREATER THAN 10' AND DOUBLE GRATE DROP INLET	5' MIN. UP TO 48" CMP (36" RCP) DIA. OF LARGEST PIPE PLUS 1'-0" CMP (2'-0" RCP) FOR PIPES LARGER THAN 48" CMP (24" RCP)

* FOR PIPE ARCHES USE SPAN DIMENSION INSTEAD OF DIAMETER
** USE ROUND TO RECTANGULAR ADAPTER SECTION WHEN USING PRECAST MANHOLE SECTIONS.
*** NEENAH FOUNDRY (OR EQUAL)

STORM MH/CATCH BASIN

SCALE:NTS G02

CONTACT RACETRAC PETROLEUM, INC. PROJECT MANAGER PRIOR TO ANY REVISIONS TO THE PLAN SUPPLIED BY RACETRAC PETROLEUM, INC.

NO.		DATE
1	JURISDICTIONAL COMMENTS	02/26/18
5	OWNER REVISIONS & JURISDICTIONAL COMMENTS	06/29/18

Columbia Engineering
2862 BUFORD HIGHWAY
SUITE 200
DULUTH, GEORGIA 30096
(770) 925-0357

GEORGIA REGISTERED No. 030074 PROFESSIONAL ENGINEER JENNIFER N. LOSURDO

THESE PLANS ARE SUBJECT TO FEDERAL COPYRIGHT LAWS: ANY USE OF SAME WITHOUT THE EXPRESSED WRITTEN PERMISSION OF RACETRAC PETROLEUM, INC. IS PROHIBITED.

RACETRAC PETROLEUM, INC.
200 GALLERIA PARKWAY,
SUITE 900, ATLANTA, GA 30339
(770) 431-7600

DETAILS

PEACHTREE CORNERS RACETRAC
5780 PEACHTREE PARKWAY
PEACHTREE CORNERS, GEORGIA
GWINNETT COUNTY
DIST. 6, LL 284, PARCELS: 6-284-16, 18, 40, 56

DRAWN-BY	JCW
DATE	01/15/2018
SCALE	N/A
DRAWING NAME:	4607.00-Details.dwg
SD6	1
SHEET NO.	VERSION

Order Plans @ WWW.LDILine.com