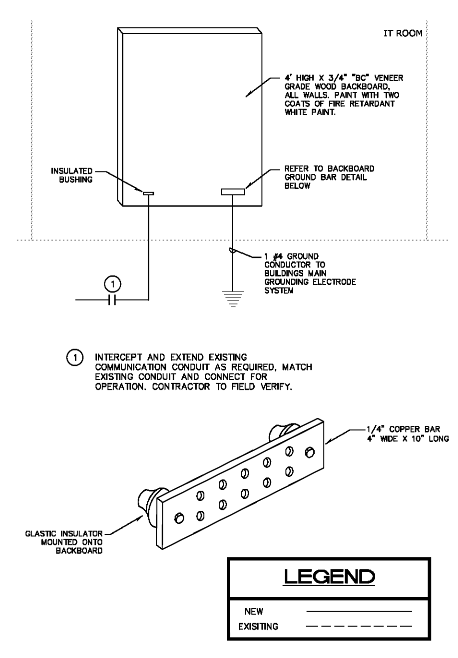

(1) INTERCEPT AND EXTEND EXISTING COMMUNICATION CONDUIT AS REQUIRED, MATCH EXISTING CONDUIT AND CONNECT FOR OPERATION. CONTRACTOR TO FIELD VERIFY.

LEGEND

NEW ————————
EXISITING — — — — — — — —

CATV/TELEPHONE BACKBOARD DETAIL

MECHANICAL EQUIPMENT-ELECTRICAL SCHEDULE

EQUIPMENT TAG	BRANCH CIRCUIT	DISCONNECT SWITCH * FRAME	FUSE	MOTOR STARTER * POLES	NEMA SIZE	NOTES
CU/AHU-1	L2A-1,3	30	(2)	2	–	(1)
CU/AHU-2	L2A-5,7	30	(2)	2	–	(1)
CU/AHU-3	L2A-9,11	30	(2)	2	–	(1)
AHU-4	L2A-13,15,17	60	(2)	3	–	
AHU-5	L2A-19,21,23	60	(2)	3	–	
AHU-6	L2A-25,27	60	(2)	2	–	
CU-4	L2A-6,8	60	(2)	2	–	(1)
CU-5	L2A-10,12	60	(2)	2	–	(1)
CU-6	L2A-14,16	30	(2)	2	–	(1)
DSS-1	L2A-2,4	30	(2)	2	–	(1)(6)
RTU-1	HA-1,3,5	30	(2)	3	–	(1)
RTU-2	HC-14,16,18	30	(2)	3	–	(1)
RTU-3	HA-7,9,11	30	(2)	3	–	(1)
RTU-4	HA-2,4,6	30	(2)	3	–	(1)
RTU-5	HC-20,22,24	30	(2)	3	–	(1)
RTU-6	HA-13,15,17	30	(2)	3	–	(1)
RTU-7	HA-8,10,12	30	(2)	3	–	(1)
RH-1	LD-12	30	–	1	–	(3)
RH-2	LD-12	30	–	1	–	(3)
RH-3	LD-12	30	–	1	–	(3)
RH-4	LD-12	30	–	1	–	(3)
H-1	LD-2,4	30	–	2	–	(3)
EF-1	LOCAL LIGHTING CIRCUIT	–	–	–	–	(4)
EF-2	LOCAL LIGHTING CIRCUIT	–	–	–	–	(4)
EF-3	LOCAL LIGHTING CIRCUIT	–	–	–	–	(4)
EF-4	L2A-18	–	–	–	–	(5)
P-1	LD-10	–	–	–	–	(7)
EWH	LD-6,8	30	–	2	–	(3)
RP-1	LC-4	–	–	–	–	(7)

KEY NOTES:
(1) PROVIDE NEMA 3R ENCLOSURE.
(2) PROVIDE FUSES AS RECOMMENDED BY EQUIPMENT MANUFACTURER OR NAMEPLATE RATING.
(3) PROVIDE MOTOR RATED SWITCH. MOUNT SWITCH ADJACENT TO UNIT.
(4) CONTROL FAN WITH LOCAL LIGHT SWITCH / MOTION SENSOR IN ROOM. FOR 277 VOLT LIGHTING BRANCH CIRCUIT, PROVIDE STEP DOWN TRANSFORMER AND CONNECT FOR OPERATION.
(5) WIRE CIRCUIT TO FAN FOR CONTINUOUS OPERATION.
(6) WIRE CIRCUIT FROM BREAKER TO CONDENSING UNIT DISCONNECT. WIRE ASSOCIATED AIR HANDLING UNIT FROM CONDENSING UNIT TERMINAL BLOCK. COORDINATE WITH MECHANICAL EQUIPMENT. PROVIDE MOTOR RATED SWITCH ADJACENT TO AHU FOR LOCAL DISCONNECTING MEANS.
(7) PROVIDE RECEPTACLE FOR CONNECTION TO PUMP AS REQUIRED.

GENERAL ROOF CU / DSS DISCONNECT MOUNTING NOTE:

CONTRACTOR TO PROVIDE INDEPENDENT MOUNTING FROM ROOF STRUCTURE, SEPARATE FROM CU/DSS, WITH UNISTRUT OR OTHER APPROVED METHOD FOR LOCAL DISCONNECT SWITCHES AS REQUIRED.

* DISCONNECT / MOTOR STARTER TO BE PROVIDED BY THIS CONTRACTOR.

BRANCH CIRCUIT PANEL KEY NOTES

(1) EXISTING BRANCH CIRCUIT WIRING AND CIRCUIT BREAKER TO REMAIN.
(2) PROVIDE NEW BRANCH CIRCUIT WIRING AS INDICATED, CONNECT TO EXISTING SPARE CIRCUIT BREAKER.
(3) PROVIDE NEW CIRCUIT BREAKER AS INDICATED, INSTALL IN EXISTING SPACE IN PANEL AND CONNECT NEW BRANCH CIRCUIT FOR OPERATION.
(4) REFER TO VOLTAGE DROP CHART FOR CONDUCTOR SIZES.
(5) EXISTING BRANCH CIRCUIT WITH LOAD MODIFIED FOR THIS PROJECT.
(6) PROVIDE CIRCUIT BREAKER WITH SHUNT TRIP AND CONTROL WIRING THRU AUXILIARY CONTACTS OF HEAT DETECTOR(S) AS REQUIRED.
(7) COORDINATE BRANCH FEEDER AND CIRCUIT BREAKER REQUIREMENT WITH ELEVATOR PROVIDER PRIOR TO ORDERING.

RECEPTACLE LOAD (175 REC. AT 180VA)	=	31.5	KVA
GENERAL LIGHTING PER 220-12 (17,560 SQ. FT. X 3.5W/SQ. FT.) (11,513 SQ. FT. X 1.0W/SQ. FT.)	=	73.0	KVA
BUILDING SIGNAGE	=	4.8	KVA
EXISTING SITE LIGHTING	=	52.0	KVA
MECHANICAL LOAD (LARGEST MOTOR 10 HP) (LARGEST UNIT 5 TON)	=	125.0	KVA
WATER HEATERS	=	4.5	KVA
ELEVATOR (EST 15HP)	=	18.0	KVA
SERVICE EQUIPMENT	=	98.0	KVA

LOAD SUMMARY-ELECTRICAL SERVICE

DIVERSIFICATION PER NEC ART. 220-44:

RECEPTACLES: 1ST 10 KVA @ 100%	=	10.0	KVA
RECEPTACLES: REMAINDER (21.5 KVA) @ 50%	=	10.7	KVA
GENERAL LIGHTING/SIGNAGE (77.8 KVA) @ 125%	=	97.2	KVA
EXISTING SITE LIGHTING (52.0 KVA) @ 125%	=	65.0	KVA
MECHANICAL LOAD	=	129.5	KVA
ELEVATOR (EST 15HP)	=	18.0	KVA
SERVICE EQUIPMENT (INCLUDING LARGEST @ 125%)	=	105.8	KVA
TOTAL LOADS		436.2	KVA
		524	AMPS

EXISTING SERVICE – 480 VOLT, 3ø, 4W, 600 AMPS

RISER KEY NOTES

(1A) PROVIDE 1#4 GROUNDING ELECTRODE CONDUCTOR IN 3/4" SCHEDULE 40 PVC CONDUIT TO NEAREST EFFECTIVELY GROUNDED BUILDING STRUCTURAL STEEL MEMBER.

(1B) PROVIDE 1#6 GROUNDING ELECTRODE CONDUCTOR IN 3/4" SCHEDULE 40 PVC CONDUIT TO NEAREST EFFECTIVELY GROUNDED BUILDING STRUCTURAL STEEL MEMBER.

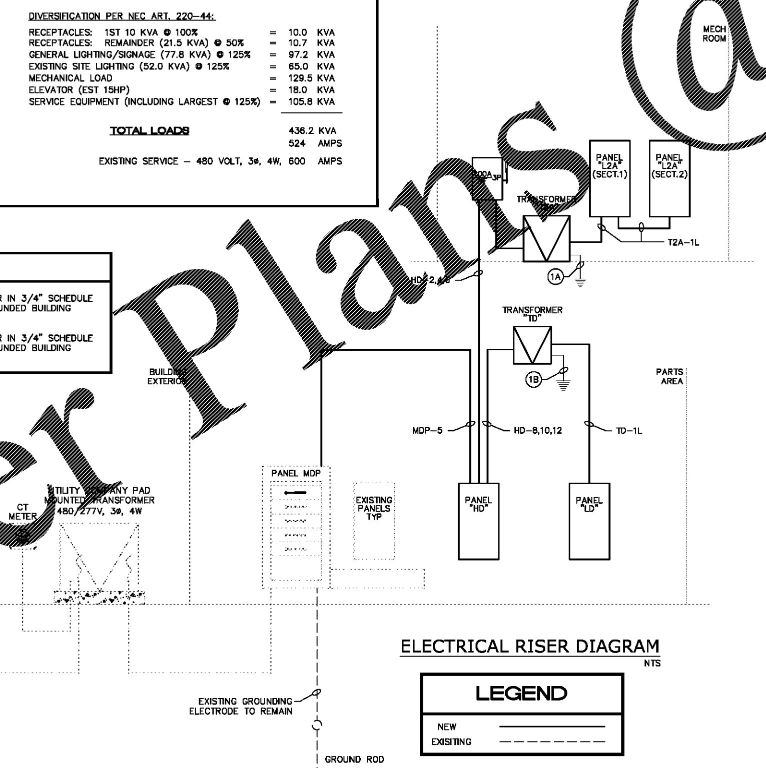

ELECTRICAL RISER DIAGRAM

NTS

LEGEND

NEW ————————
EXISITING — — — — — — — —

SCHEDULE OF EXISTING BRANCH CIRCUIT PANEL "SIGN"

PANEL SPECIFICATIONS: EXISTING; 125 AMP MAIN LUGS ONLY; SURFACE MOUNTED
AIC SYMMETRICAL: EXISTING
VOLTAGE: 240/120V, 1ø, 3 WIRE

CIRCUIT DESCRIPTION	WIRE	GROUND	CONDUIT	BREAKER	CIRCUIT	A PHASE KVA	B PHASE KVA	CIRCUIT	BREAKER	CONDUIT	GROUND	WIRE	CIRCUIT DESCRIPTION
EXISTING (1)	–	–	–	–	1	1.0 1.0		2	–	–	–	–	EXISTING (1)
EXISTING (1)	–	–	–	–	3		1.0 1.0	4	–	–	–	–	EXISTING (1)
EXISTING (1)	–	–	–	–	5	1.0 –		6	–	–	–	–	SPACE
EXISTING (1)	–	–	–	–	7		1.0 –	8	–	–	–	–	SPACE
LIGHTING, BUILDING SIGNAGE (3)	(4)	(4)	3/4"	20	9	1.0 –		10	–	–	–	–	SPACE
LIGHTING, BUILDING SIGNAGE (3)	(4)	(4)	3/4"	20	11		1.0 –	12	–	–	–	–	SPACE
						4.0	4.0	KVA TOTAL PER PHASE					
						33	33	AMPS TOTAL PER PHASE					
						8.0		KVA TOTAL					

SCHEDULE OF BRANCH CIRCUIT PANEL "L2A" SECTION #1

PANEL SPECIFICATIONS: SQUARE D "NQ" SERIES; 200 AMP MAIN CIRCUIT BREAKER WITH FEED THRU LUGS; RECESSED MOUNTED
AIC SYMMETRICAL: 10,000
VOLTAGE: 208/120V, 3ø, 4 WIRE

CIRCUIT DESCRIPTION	WIRE	GROUND	CONDUIT	BREAKER	CIRCUIT	A PHASE KVA	B PHASE KVA	C PHASE KVA	CIRCUIT	BREAKER	CONDUIT	GROUND	WIRE	CIRCUIT DESCRIPTION
RECEPT., TAG AND TITLE	2#12	1#12	3/4"	20	1	0.4 0.4			2	20	3/4"	1#12	2#12	RECEPT., IT
RECEPT., FILES/ADMIN	2#12	1#12	3/4"	20	3		0.4 0.4		4	20	3/4"	1#12	2#12	RECEPT., IT
RECEPT., ADMIN REF	2#12	1#12	3/4"	20	5			0.8 0.4	6	20	3/4"	1#12	2#12	RECEPT., IT
RECEPT., ADMIN COUNTER	2#12	1#12	3/4"	20	7	0.8 –			8	20	–	–	–	SPARE
SPARE	–	–	–	20	9		– –		10	20	–	–	–	SPARE
SPARE	–	–	–	20	11			– 0.8	12	20	3/4"	1#12	2#12	RECEPT., RR/FOUNTAIN
RECEPT., OPEN ADMIN	2#12	1#12	3/4"	20	13	0.6 0.8			14	20	3/4"	1#12	2#12	RECEPT., BDC
RECEPT., OPEN ADMIN	2#12	1#12	3/4"	20	15		0.6 0.8		16	20	3/4"	1#12	2#12	RECEPT., BDC
RECEPT., ASST. MANAGER	2#12	1#12	3/4"	20	17			0.6 0.8	18	20	3/4"	1#12	2#12	RECEPT., BDC
RECEPT., COMPTROLLER	2#12	1#12	3/4"	20	19	0.6 0.8			20	20	3/4"	1#12	2#12	RECEPT., BDC
RECEPT., PASSAGE	2#12	1#12	3/4"	20	21		0.6 0.8		22	20	3/4"	1#12	2#12	RECEPT., BDC
SPARE	–	–	–	20	23			– 0.8	24	20	3/4"	1#12	2#12	RECEPT., BDC
RECEPT., OFFICE	2#12	1#12	3/4"	20	25	0.6 0.8			26	20	3/4"	1#12	2#12	RECEPT., BDC
RECEPT., OFFICE	2#12	1#12	3/4"	20	27		0.6 0.8		28	20	3/4"	1#12	2#12	RECEPT., BDC
RECEPT., OFFICE	2#12	1#12	3/4"	20	29			0.6 –	30	20	–	–	–	SPARE
RECEPT., OFFICE	2#12	1#12	3/4"	20	31	0.6 0.8			32	20	3/4"	1#12	2#12	RECEPT., TECH RR
SPARE	–	–	–	20	33		– 0.8		34	20	3/4"	1#12	2#12	RECEPT., TECH LOUNGE
RECEPT., ROOF	2#12	1#12	3/4"	20	35			0.8 0.8	36	20	3/4"	1#12	2#12	RECEPT., TECH LOUNGE REF
RECEPT., ELEVATOR	2#12	1#12	3/4"	20	37	0.2 0.8			38	20	3/4"	1#12	2#12	RECEPT., TECH LOUNGE CNTR
SPARE	–	–	–	20	39		– –		40	20	–	–	–	SPARE
SPARE	–	–	–	20	41			– –	42	20	–	–	–	SPARE
						8.2	5.8	6.4	KVA TOTAL PER PHASE SECTION 1					
						13.1	13.1	9.8	KVA TOTAL PER PHASE SECTION 2					
						21.3	18.9	16.2	KVA TOTAL PER PHASE					
						177	158	133	AMPS TOTAL PER PHASE					
							56.4		KVA TOTAL					

SCHEDULE OF BRANCH CIRCUIT PANEL "L2A" SECTION #2

PANEL SPECIFICATIONS: SQUARE D "NQ" SERIES; 225 AMP MAIN LUG ONLY; RECESSED MOUNTED
AIC SYMMETRICAL: 10,000
VOLTAGE: 208/120V, 3ø, 4 WIRE

CIRCUIT DESCRIPTION	WIRE	GROUND	CONDUIT	BREAKER	CIRCUIT	A PHASE KVA	B PHASE KVA	C PHASE KVA	CIRCUIT	BREAKER	CONDUIT	GROUND	WIRE	CIRCUIT DESCRIPTION
AHU/CU-1	2#12	1#12	3/4"	15	1	(0.9)(1.0)			2	20	3/4"	1#12	2#12	DSS-1
				2	3		(0.9)(1.0)		4	2				
AHU/CU-2	2#12	1#12	3/4"	15	5			(0.9)(2.3)	6	[illegible]	[illegible]	1#10	2#8	CU-4
				2	7	(0.9)(2.3)			8	2				
AHU/CU-3	2#12	1#12	3/4"	20	9		(1.5)(2.3)		10	50	[illegible]	[illegible]	2#8	[illegible]-5
				2	11			[illegible]	12	2				
AHU-4	3#8	1#10	3/4"	50	13	4.9 (0.8)			[illegible]	20	3/4"	[illegible]	[illegible]	[illegible]-6
					15		[illegible] (0.8)		[illegible]	2				
				3	17			4.9 0.1	[illegible]	[illegible]	3/4"	1#12	[illegible]	[illegible]
AHU-5	3#8	1#10	3/4"	50	19	4.9 –			20	[illegible]	–	–	–	SPACE
					21		4.9 –		22	–	–	–	–	SPACE
				3	23			4.9 –	24	–	–	–	–	SPACE
AHU-6	2#8	1#10	3/4"	[illegible]	25	3.3 –			26	–	–	–	–	SPACE
				2	27		3.3 [illegible]		28	–	–	–	–	SPACE
SPACE	–	–	–	–	29			– –	30	–	–	–	–	SPACE
SPACE	–	–	–	–	31	[illegible]			32	–	–	–	–	SPACE
SPACE	–	–	–	–	33		– –		34	–	–	–	–	SPACE
SPACE	–	–	–	–	35			– –	36	–	–	–	–	SPACE
SPACE	–	–	–	–	37	– –			38	–	–	–	–	SPACE
SPACE	–	–	–	–	39		– –		40	–	–	–	–	SPACE
SPACE	–	–	–	–	41			– –	42	–	–	–	–	SPACE
						[illegible]	13.1	9.8	KVA TOTAL PER PHASE					
						[illegible]	109	83	AMPS TOTAL PER PHASE					
							36.0		KVA TOTAL					

( ) = NON-CONCURRENT LOAD

SCHEDULE OF BRANCH CIRCUIT PANEL "HD"

PANEL SPECIFICATIONS: SQUARE D "[illegible]" SERIES OR EQUIV.; 250 AMP MAIN LUGS ONLY; SURFACE MOUNTED
AIC SYMMETRICAL: 25,000
VOLTAGE: 480/277V, 3ø, 4 WIRE

CIRCUIT DESCRIPTION	WIRE	GROUND	CONDUIT	BREAKER	CIRCUIT	A PHASE KVA	B PHASE KVA	C PHASE KVA	CIRCUIT	BREAKER	CONDUIT	GROUND	WIRE	CIRCUIT DESCRIPTION
SPACE	–	–	–	–	1	– 21.3			2	100	1-1/4"	1#8	3#3	PANEL "L2A" VIA TRANS "T2A"
SPACE	–	–	–	–	3		– 18.9		4					
SPACE	–	–	–	–	5			– 16.2	6	3				
SPACE	–	–	–	–	7	– 11.2			8	70	1"	1#8	3#4	PANEL "LD" VIA TRANS "TD"
SPACE	–	–	–	–	9		– 9.8		10					
SPACE	–	–	–	–	11			– 9.1	12	3				
SPACE	–	–	–	–	13	– –			14	–	–	–	–	SPACE
SPACE	–	–	–	–	15		– –		16	–	–	–	–	SPACE
SPACE	–	–	–	–	17			– –	18	–	–	–	–	SPACE
SPACE	–	–	–	–	19	– –			20	–	–	–	–	SPACE
SPACE	–	–	–	–	21		– –		22	–	–	–	–	SPACE
SPACE	–	–	–	–	23			– –	24	–	–	–	–	SPACE
SPACE	–	–	–	–	25	– –			26	–	–	–	–	SPACE
SPACE	–	–	–	–	27		– –		28	–	–	–	–	SPACE
SPACE	–	–	–	–	29			– –	30	–	–	–	–	SPACE
						32.5	28.7	25.3	KVA TOTAL PER PHASE					
						119	105	91	AMPS TOTAL PER PHASE					
							86.5		KVA TOTAL					

SCHEDULE OF BRANCH CIRCUIT PANEL "LD"

PANEL SPECIFICATIONS: SQUARE D "NQ" SERIES OR EQUIV.; 150 AMP MAIN CIRCUIT BREAKER WITH FEED THRU LUGS; SURFACE MOUNTED
AIC SYMMETRICAL: 22,000
VOLTAGE: 208/120V, 3ø, 4 WIRE

CIRCUIT DESCRIPTION	WIRE	GROUND	CONDUIT	BREAKER	CIRCUIT	A PHASE KVA	B PHASE KVA	C PHASE KVA	CIRCUIT	BREAKER	CONDUIT	GROUND	WIRE	CIRCUIT DESCRIPTION
LIGHTING, SERVICE DR	2#12	1#12	3/4"	20	1	1.2 1.5			2	20	3/4"	1#10	2#10	H-1
LIGHTING, SERVICE DR	2#12	1#12	3/4"	20	3		1.2 1.5		4	2				
SPARE	–	–	–	20	5			– 1.5	6	20	3/4"	1#10	2#10	EWH
SPARE	–	–	–	20	7	– 1.5			8	2				
SPARE	–	–	–	20	9		– 0.1		10	15	3/4"	1#12	2#12	RECEPT., P-1
SPARE	–	–	–	20	11			– 0.4	12	15	3/4"	1#12	2#12	RH-1,2,3,4
SPARE	–	–	–	20	13	– –			14	–	–	–	–	SPACE
RECEPT., SALES WORKROOM	2#12	1#12	3/4"	20	15		0.6 –		16	–	–	–	–	SPACE
RECEPT., SALES WORKROOM	2#12	1#12	3/4"	20	17			0.6 –	18	–	–	–	–	SPACE
RECEPT., SALES WORKROOM	2#12	1#12	3/4"	20	19	0.6 –			20	–	–	–	–	SPACE
SPARE	–	–	–	20	21		– –		22	–	–	–	–	SPACE
SPARE	–	–	–	20	23			– –	24	–	–	–	–	SPACE
RECEPT., SERVICE WRITE-UP	2#12	1#12	3/4"	20	25	0.8 –			26	–	–	–	–	SPACE
RECEPT., SERVICE WRITE-UP	2#12	1#12	3/4"	20	27		0.4 –		28	–	–	–	–	SPACE
RECEPT., SERVICE WRITE-UP	2#12	1#12	3/4"	20	29			0.4 –	30	–	–	–	–	SPACE
SPACE	–	–	–	–	31	– 3.6			32	40	1"	1#10	3#6	EV CAR CHARGER
SPACE	–	–	–	–	33		– 3.6		34	2				
SPACE	–	–	–	–	35			– 3.6	36	40	1"	1#10	3#6	EV CAR CHARGER
SPACE	–	–	–	–	37	– 3.6			38	2				
SPACE	–	–	–	–	39		– 3.6		40	40	3/4"	1#10	3#8	EV CAR CHARGER
SPACE	–	–	–	–	41			– 3.6	42	2				
						11.2	9.8	9.1	KVA TOTAL PER PHASE					
						93	83	75	AMPS TOTAL PER PHASE					
							30.1		KVA TOTAL					

SCHEDULE OF DRY-TYPE TRANSFORMERS

MARK	KVA	VOLTAGE PRIMARY	VOLTAGE SECONDARY	MOUNTING	SECONDARY FEEDER MARK	BREAKER	FEEDER	NOTES
"TD"	45	480 VOLT 3ø,3W	208/120 VOLT 3ø,4W	SUSPENDED	TD-1L	(1)	4#1/0 & 1#6G IN 2"	
"T2A"	75	480 VOLT 3ø,3W	208/120 VOLT 3ø,4W	FLOOR	T2A-1L	(1)	4#4/0 & 1#2G IN 2-1/2"	

KEY NOTE:
(1) PANEL MAIN BREAKER IS TRANSFORMER SECONDARY BREAKER.

SCHEDULE OF EXISTING BRANCH CIRCUIT PANEL "HA"

PANEL SPECIFICATIONS: SQUARE D SERIES; 225 AMP MAIN LUGS ONLY; SURFACE MOUNTED
AIC SYMMETRICAL: EXISTING
VOLTAGE: 480/277V, 3ø, 4 WIRE

CIRCUIT DESCRIPTION	WIRE	GROUND	CONDUIT	BREAKER	CIRCUIT	A PHASE KVA	B PHASE KVA	C PHASE KVA	CIRCUIT	BREAKER	CONDUIT	GROUND	WIRE	CIRCUIT DESCRIPTION
RTU-1 (2)	3#10	1#10	3/4"	30	1	4.9 3.3			2	20	3/4"	1#10	3#10	RTU-4 (2)
					3		4.9 3.3		4					
				3	5			4.9 3.3	6	3				
RTU-3 (2)	3#10	1#10	3/4"	20	7	3.3 2.5			8	20	3/4"	1#10	3#10	RTU-7 (2)
					9		3.3 2.5		10					
				3	11			3.3 2.5	12	3				
RTU-6 (2)	3#10	1#10	3/4"	20	13	3.3 13.0			14	60	–	–	–	CW BLOWERS (1)
					15		3.3 13.0		16					
				3	17			3.3 13.0	18	3				
CW BLOWERS (1)	–	–	–	60	19	13.0 2.0			20	20	–	–	–	EXISTING (1)
					21		13.0 –		22	–	–	–	–	SPACE
				3	23			13.0 –	24	–	–	–	–	SPACE
						45.3	43.3	43.3	KVA TOTAL PER PHASE					
						164	156	156	AMPS TOTAL PER PHASE					
							131.9		KVA TOTAL					

GENERAL NOTE:
CONTRACTOR TO FIELD VERIFY, EXISTING BRANCH FEEDER CONDUCTORS TO BE MINIMUM OF #3/0 (200A), IF NOT, REPLACE WITH NEW #3/0 CONDUCTORS, REMOVE EXISTING FUSES IN PANEL MDP, PROVIDE 200A FUSES AND CONNECT NEW BRANCH FEEDER FOR OPERATION.

SCHEDULE OF EXISTING BRANCH CIRCUIT PANEL "HC"

PANEL SPECIFICATIONS: SQUARE D "NF" SERIES; 250 AMP MAIN LUGS ONLY; SURFACE MOUNTED
AIC SYMMETRICAL: [illegible]
VOLTAGE: 480/277V, 3ø, 4 WIRE

CIRCUIT DESCRIPTION	WIRE	GROUND	CONDUIT	BREAKER	CIRCUIT	A PHASE KVA	B PHASE KVA	C PHASE KVA	CIRCUIT	BREAKER	CONDUIT	GROUND	WIRE	CIRCUIT DESCRIPTION
A/C (SERVICE) (1)	–	–	[illegible]	40	1	6.0 6.0			2	[illegible]	–	[illegible]	–	A/C (SERVICE) (1)
					3		6.0 6.0		4					
				3	5			[illegible] 6.0	6	3				
SPACE	[illegible]	–	[illegible]	–	7	– 5.8			8	60	1-1/2"	1#10	3#6	ELEVATOR (3)(6)(7)
SPACE	[illegible]	–	–	–	9		– 5.8		10					
SPACE	[illegible]	–	–	[illegible]	11			– [illegible]	[illegible]	3				
SPACE	[illegible]	–	–	[illegible]	13	– 4.9			14	30	3/4"	1#10	3#10	RTU-2 (3)
SPACE	[illegible]	–	–	[illegible]	15		– [illegible]		16					
LIGHTING, NVD/CUST LNGE/CORR (3)	[illegible]	1#12	3/4"	[illegible]	[illegible]			2.9 4.9	18	3				
LIGHTING, OFFICES/[illegible] (3)	[illegible]	[illegible]	3/4"	20	[illegible]	1.9 4.7			20	30	3/4"	1#10	3#10	RTU-5 (3)
LIGHTING, [illegible] (3)	2#12	[illegible]	3/4"	20	[illegible]		[illegible] 4.7		22					
LIGHTING, 2ND FL OFF[illegible] (3)	2#10	[illegible]	3/4"	20	[illegible]			2.4 4.7	24	3				
LIGHTING, SHWRM/CONC/[illegible] (3)	2#10	[illegible]	3/4"	20	[illegible]	[illegible] –			26	–	–	–	–	SPACE
LIGHTING, SHWRM/2ND FL CO[illegible]	2#10	1#[illegible]	[illegible]	20	[illegible]		3.3 –		28	–	–	–	–	SPACE
LIGHTING, SHWRM/EXT COVE	2#10	1#10	[illegible]	20	29			2.0 –	30	–	–	–	–	SPACE
LIGHTING, SHWRM NL	2#10	1#10	[illegible]	20	31	1.6 –			32	–	–	–	–	SPACE
SPACE	–	–	–	–	33		– –		34	–	–	–	–	SPACE
SPACE	–	–	–	–	35			– –	36	–	–	–	–	SPACE
SPACE	–	–	–	–	37	– –			38	–	–	–	–	SPACE
SPACE	–	–	–	–	39		– –		40	–	–	–	–	SPACE
SPACE	–	–	–	–	41			– –	42	–	–	–	–	SPACE
						33.3	31.0	34.7	KVA TOTAL PER PHASE					
						120	112	125	AMPS TOTAL PER PHASE					
							99.0		KVA TOTAL					

GENERAL NOTE:
CONTRACTOR [illegible] FIELD VERIFY, EXISTING BRANCH FEEDER CONDUCTORS [illegible] MINIMUM OF #3/0 (200A), IF NOT, REPLACE WITH [illegible] #3/0 CONDUCTORS, REMOVE EXISTING FUSES IN PANEL MDP, PROVIDE 200A FUSES AND CONNECT NEW BRANCH FEEDER FOR OPERATION.

SCHEDULE OF EXISTING BRANCH CIRCUIT PANEL "LA"

PANEL SPECIFICATIONS: SQUARE D; 150 AMP MAIN CIRCUIT BREAKER; SURFACE MOUNTED
AIC SYMMETRICAL: 10,000
VOLTAGE: 208/120V, 3ø, 4 WIRE

CIRCUIT DESCRIPTION	WIRE	GROUND	CONDUIT	BREAKER	CIRCUIT	A PHASE KVA	B PHASE KVA	C PHASE KVA	CIRCUIT	BREAKER	CONDUIT	GROUND	WIRE	CIRCUIT DESCRIPTION
RECEPT., TECH PARTS (2)	2#12	1#12	3/4"	20	1	0.6 0.8			2	20	3/4"	1#12	2#12	RECEPT., CUST LOUNGE CNTR (2)
RECEPT., PARTS MANAGER (2)	2#12	1#12	3/4"	20	3		0.4 0.8		4	20	3/4"	1#12	2#12	RECEPT., CUST LOUNGE CNTR (2)
RECEPT., COPIER TECH (2)	2#12	1#12	3/4"	20	5			0.8 0.8	6	20	3/4"	1#12	2#12	RECEPT., CUST LOUNGE CNTR (2)
SPARE	–	–	–	20	7	– 0.8			8	20	3/4"	1#12	2#12	RECEPT., CUST LOUNGE CNTR (2)
SPARE	–	–	–	20	9		– 0.8		10	20	3/4"	1#12	2#12	RECEPT., COPIER WORKRM (2)
RECEPT., SERVICE MANAGER (2)	2#12	1#12	3/4"	20	11			0.8 0.8	12	20	3/4"	1#12	2#12	RECEPT., CNTR WORKRM (2)
RECEPT./LIGHTING, ELEVATOR PIT (2)	2#12	1#12	3/4"	20	13	0.6 1.2			14	20	–	–	–	LIGHTING, CAR WASH (1)
RECEPT., ELEVATOR PIT (2)	2#12	1#12	3/4"	20	15		0.4 1.6		16	20	–	–	–	CAR WASH HEATER (1)
RECEPT., CUSTOMER LOUNGE (2)	2#12	1#12	3/4"	20	17			0.8 0.8	18	20	3/4"	1#12	2#12	RECEPT., TECH PARTS (2)
RECEPT., CUSTOMER LOUNGE (2)	2#12	1#12	3/4"	20	19	0.8 0.8			20	20	3/4"	1#12	2#12	RECEPT., RESTROOM/FOUNTAIN (2)
DRIVE THRU FURNACE (1)	–	–	–	20	21		1.6 0.4		22	20	3/4"	1#12	2#12	RECEPT., SALES (2)
RECEPT., VR ROOM (1)	2#12	1#12	3/4"	20	23			0.6 0.4	24	20	3/4"	1#12	2#12	RECEPT., SALES (2)
RECEPT., VR ROOM (2)	2#12	1#12	3/4"	20	25	0.6 0.4			26	20	3/4"	1#12	2#12	RECEPT., SALES (2)
RECEPT., VR ROOM (2)	2#12	1#12	3/4"	20	27		0.6 0.4		28	20	3/4"	1#12	2#12	RECEPT., SALES MNGRS (2)
SPARE	–	–	–	20	29			– 0.6	30	20	3/4"	1#12	2#12	RECEPT., SALES MNGRS (2)
PARTS UNIT HEATER (1)	–	–	–	20	31	0.1 0.6			32	20	3/4"	1#12	2#12	RECEPT., SALES MNGRS (2)
RECEPT., SHOWROOM (2)	2#12	1#12	3/4"	20	33		0.4 –		34	20	–	–	–	SPARE
RECEPT., SHOWROOM (2)	2#12	1#12	3/4"	20	35			0.8 0.8	36	20	–	–	–	RECEPT., TIRE CHANGER (1)
RECEPT., SHOWROOM (2)	2#12	1#12	3/4"	20	37	0.8 0.8			38	20	–	–	–	RECEPT., WHEEL BALANCER (1)
RECEPT., SHOWROOM (2)	2#12	1#12	3/4"	20	39		0.8 0.8		40					
SPARE	–	–	–	20	41			– 0.8	42	3				
						9.7	9.0	8.0	KVA TOTAL PER PHASE					
						83	75	66	AMPS TOTAL PER PHASE					
							26.7		KVA TOTAL					

SCHEDULE OF EXISTING BRANCH CIRCUIT PANEL "LC"

PANEL SPECIFICATIONS: SQUARE D; 150 AMP MAIN CIRCUIT BREAKER; SURFACE MOUNTED
AIC SYMMETRICAL: 10,000
VOLTAGE: 208/120V, 3ø, 4 WIRE

CIRCUIT DESCRIPTION	WIRE	GROUND	CONDUIT	BREAKER	CIRCUIT	A PHASE KVA	B PHASE KVA	C PHASE KVA	CIRCUIT	BREAKER	CONDUIT	GROUND	WIRE	CIRCUIT DESCRIPTION
RECEPT., GENERAL MANAGER (2)	2#12	1#12	3/4"	20	1	0.6 0.1			2	20	3/4"	1#12	2#12	FIRE ALARM PNL (2)
RECEPT., F&I (2)	2#12	1#12	3/4"	20	3		0.8 0.6		4	20	3/4"	1#12	2#12	RECEPT., JAN/COOR (2)
RECEPT., F&I (2)	2#12	1#12	3/4"	20	5			0.8 0.4	6	20	3/4"	1#12	2#12	RECEPT., WAP (2)
RECEPT., SERV VENDING (GFI) (1)	–	–	–	20	7	1.2 3.6			8	40	1"	1#10	3#8	EV CAR CHARGER (SHOP) (3)
RECEPT., SERV VENDING (GFI) (1)	–	–	–	20	9		1.2 3.6		10	2				
RECEPT., SERV DEPT BENCH (1)	–	–	–	20	11			0.4 4.7	12	60	–	–	–	SUB FEED PANEL (1)
RECEPT., NVD (2)	2#12	1#12	3/4"	20	13	0.4 4.7			14					
RECEPT., CONCIERGE (2)	2#12	1#12	3/4"	20	15		0.6 4.7		16	3				
RECEPT., VEST/SHWRM (2)	2#12	1#12	3/4"	20	17			0.6 –	18	20	–	–	–	SPARE
RECEPT., EXTERIOR (2)	2#12	1#12	3/4"	20	19	0.6 2.0			20	30	–	–	–	AIR COMPRESSOR (1)
RECEPT., SHWRM (2)	2#12	1#12	3/4"	20	21		– 2.0		22					
SIGN SUBFEED PANEL (1)(5)	–	–	–	60	23			4.0 2.0	24	3				
				2	25	4.0 0.8			26	20	–	–	–	CAR WASH CONT. PANEL (1)
AIR DRYER (1)	–	–	–	20	27		0.8 0.8		28					
PHOTO CELL (1)	–	–	–	20	29			0.8 0.8	30	3				
						18.0	15.1	14.5	KVA TOTAL PER PHASE					
						150	125	121	AMPS TOTAL PER PHASE					
							47.6		KVA TOTAL					

TRANSFORMER (150KVA) LOAD SUMMARY

PANEL "LA"	26.7	KVA
PANEL "LB"	49.2	KVA
PANEL "LC"	47.6	KVA
TOTAL KVA:	123.5	KVA
	344	AMPS

SCHEDULE OF EXISTING DISTRIBUTION PANEL "MDP"

PANEL SPECIFICATIONS: SQUARE D SERIES; 600 AMP MAIN LUG ONLY; SURFACE MOUNTED
AIC SYMMETRICAL: EXISTING
VOLTAGE: 480/277V, 3ø, 4 WIRE

TAG	CIRCUIT DESCRIPTION	FRAME	FUSE	POLES	FEEDER	A PHASE KVA	B PHASE KVA	C PHASE KVA	NOTES
MDP-1	TRANSFORMER T1 (PANELS LA/LB/LC)	–	200	3	EXISTING	41.0	41.0	41.0	(1)(3)
MDP-2	PANEL HB	–	200	3	EXISTING	24.8	25.8	21.8	(1)
MDP-3	PANEL HA	–	200	3	EXISTING	45.3	43.3	43.3	(1)(3)
MDP-4	PANEL HC	–	200	3	EXISTING	35.8	34.0	37.2	(1)(3)
MDP-5	PANEL HD	–	200	3	4#3/0 & 1#6G IN 2-1/2"	32.5	28.7	25.3	(2)
						179.4*	172.8*	168.6*	KVA TOTAL PER PHASE
						647*	624*	610*	AMPS TOTAL PER PHASE
							520.8*		KVA TOTAL

(1) EXISTING BRANCH FEEDER WIRING AND FUSE TO REMAIN.
(2) PROVIDE NEW FUSE BUCKET SECTION AS INDICATED, INSTALL IN EXISTING SPACE IN PANEL AND CONNECT NEW BRANCH FEEDER FOR OPERATION. CONTRACTOR TO FIELD VERIFY EXISTING BUSSING FOR PROPOSED NEW FUSE SECTION. NOTIFY ENGINEER IF PANEL WILL NOT ACCEPT FUSE SECTION AS INDICATED.
(3) EXISTING BRANCH FEEDER WITH LOAD MODIFIED FOR THIS PROJECT.

* REFER TO LOAD SUMARY

YSM DESIGN
RETAILAUTOMOTIVEARCHITECTURE
1320 Ellsworth Industrial Blvd
Suite A-100
Atlanta GA 30318
404-249-4555 tel
404-355-6394 fax
www.ysmdesign.com

RELEASED FOR CONSTRUCTION

Signed & Sealed: 08/30/18

Copyright (c) 2014 YSM Design, P.C.

All reports, plans, specifications, computer files, field data, notes and other documents and instruments prepared by YSM Design, P.C. shall retain all common law, statutory and other reserved rights, including copyright thereto.

This drawing may not be reproduced in whole or in part without written permission of YSM Design, P.C. It is to be returned upon request. Scales as stated are only valid on the original drawings.

Rev	Date	Comments
	08/30/18	Permit/Bid Set

BID SET

Every Contractor or Subcontractor, by submitting a bid for this project declares that they have reviewed all aspects of this project and have included all work required to provide a complete project that meets all building codes.

If questions or discrepancies are found between trades, these should be submitted by the bidding General Contractor as a Request For Information before bids are due. These clarifications will be issued to all Bidders in Addenda. No consideration will be given after the bid date for issues that could clearly have been answered during the Bidding Period.

Information to all Bidders:
For more information about this bid, including: a list of the most current documents, Instructions to Bidders, Responsibility Chart, answers to RFI, etc., go to project website. Note this address will be provided to bidders with invitation to bid.

It is the responsibility of ALL Bidders to become familiar with this site and the additional information that is contained there. If you do not have access to the internet you MUST contact your General Contractor for this information. No Change Orders will be accepted for not reviewing this information.

No consideration will be given for Change Order Requests based on any of the following:
1. Items requiring clarification but not clearly indicated as an exception on the initial bid.
2. Items requiring clarification but not submitted to Architect as a request for information during bidding.
3. Items deemed to be industry standard for a particular system or assembly.
4. Items that can reasonably be inferred from contract documents.

PRO BUILDING SYSTEMS
DESIGN BUILD CONTRACTORS

PROMUS
SCOTT MERIWETHER, P.E.
GEORGIA LICENSE #30780
518 BLACK CANYON PARK
CANTON, GA 30114
PROJECT MANAGER: GEORGE DAVIDOV
PHONE 678.246.5164

JIM ELLIS CADILLAC
5880 PEACHTREE BLVD
ATLANTA, GA 30341

Project:
JIM ELLIS CADILLAC
5880 PEACHTREE BLVD
ATLANTA, GA 30341

Project Number: 18020
Drawn By: GD
Checked By: DF
Approved By: SM

Sheet Title:
ELECTRICAL PANEL SCHEDULES

Sheet Number:
E501

Order Plans @ WWW.DHLine.com