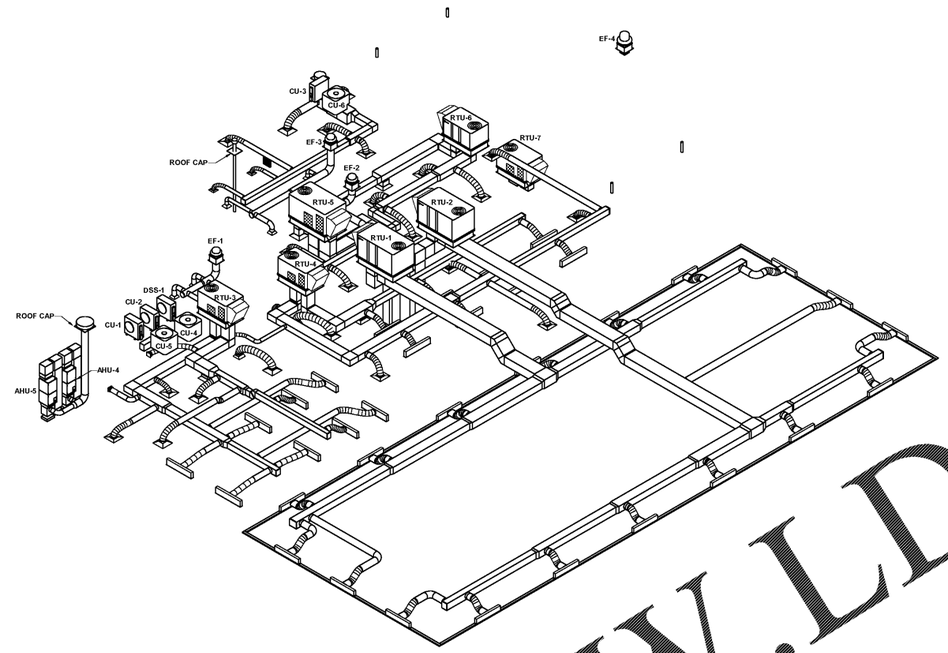

2 MECHANICAL 3D VIEW - SECOND FLOOR
M401

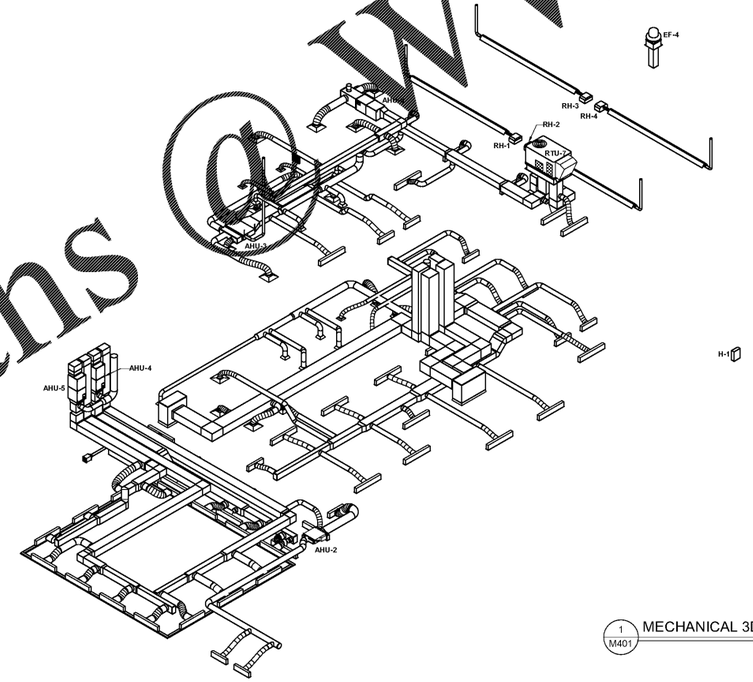

1 MECHANICAL 3D VIEW - FIRST FLOOR
M401

Order Plans @ WWW.LDILine.com

ysm DESIGN
RETAIL AUTOMOTIVE ARCHITECTURE

1320 Ellsworth Industrial Blvd
Suite A-100
Atlanta GA 30318
404-249-4555 tel
404-355-6394 fax

www.ysmdesign.com

ISSUED FOR CONSTRUCTION

Signed & Sealed: 08/30/18

Copyright (c) 2014 YSM Design, P.C.

All reports, plans, specifications, computer files, field data, notes and other documents and instruments prepared by YSM Design, P.C. shall remain all common law, statutory and other reserved rights, including copyright thereto.

This drawing may not be reproduced in whole or in part without written permission of YSM Design, P.C. It is to be returned upon request. Scales as stated are only valid on this original drawing.

Rev	Date	Comments
	08/30/18	Permit/Bid Set

BID SET

Every Contractor or Subcontractor, by submitting a bid for this project declares that they have reviewed all aspects of this project and have included all work required to provide a complete project that meets all building codes.

If questions or discrepancies are found between trades, these should be submitted by the bidding General Contractor as a Request For Information before bids are due. These clarifications will be issued to all Bidders in Addenda. No consideration will be given after the bid date for issues that could clearly have been answered during the Bidding Period.

Information to all Bidders:
For more information about this bid, including: a list of the most current documents, Instructions to Bidders, Responsibility Chart, answers to RFI, etc., go to project website. Note this address will be provided to bidders with invitation to bid.

It is the responsibility of ALL Bidders to become familiar with this site and the additional information that is contained there. If you do not have access to the internet you MUST contact your General Contractor for this information. No Change Orders will be accepted for not reviewing this information.

No consideration will be given for Change Order Requests based on any of the following:
1. Items requiring clarification but not clearly indicated as an exception on the initial bid.
2. Items requiring clarification but not submitted to Architect as a request for information during bidding.
3. Items deemed to be industry standard for a particular system or assembly.
4. Items that can reasonably be inferred from contract documents.

PRO BUILDING SYSTEMS
DESIGN BUILD CONTRACTORS

Client:

JIM ELLIS CADILLAC

5880 PEACHTREE BLVD
ATLANTA, GA 30341

Project:

JIM ELLIS CADILLAC

5880 PEACHTREE BLVD
ATLANTA, GA 30341

Project Number: *18020*
Drawn By: *GD*
Checked By: *DF*
Approved By: *SM*

Sheet Title:

MECHANICAL 3D VIEWS

Sheet Number:

M401

PROMUS
SCOTT MERIWETHER, P.E.
GEORGIA LICENSE #30780

518 BLACK CANYON PARK
CANTON, GA 30114
PROJECT MANAGER: GEORGE DAVIDOV
PHONE 678.246.5164