EROSION, SEDIMENTATION & POLLUTION CONTROL PLAN CHECKLIST
STAND ALONE CONSTRUCTION PROJECTS

SWCD:____________________

Project Name: JIM ELLIS CADILLAC Address: 5880 PEACHTREE BLVD

City/County: CITY OF CHAMBLEE Date on Plans: 3-22-18

Name&email of person filling out checklist: JON EVANS, P.E./jevans@evansdg.com

TO BE SHOWN ON ES&PC PLAN

Plan Page #	Included Y/N	Item
8	Y	1 The applicable Erosion, Sedimentation and Pollution Control Plan Checklist established by the Commission as of January 1 of the year in which the land-disturbing activity was permitted. (The completed Checklist must be submitted with the ES&PC Plan or the Plan will not be reviewed)
7-11	Y	2 Level II certification number issued by the Commission, signature and seal of the certified design professional. (Signature, seal and Level II number must be on each sheet pertaining to ES&PC plan or the Plan will not be reviewed)
	N/A	3 Limits of disturbance shall be no greater than 50 acres at any one time without prior written authorization from the EPD District Office. If EPD approves the request to disturb 50 acres or more at any one time, the plan must include at least 4 of the BMPs listed in Appendix 1 of this checklist.* (A copy of the written approval by EPD must be attached to the plan for the plan to be reviewed.)
7	Y	4 The name and phone number of the 24-hour local contact responsible for erosion, sedimentation and pollution c
7	Y	5 Provide the name, address and phone number of primary permittee.
7	Y	6 Note total and disturbed acreage of the project or phase under construction.
9-10	Y	7 Provide the GPS location of the construction exit for the site. Give the Latitude and Longitude in decimal degrees
7-11	Y	8 Initial date of the Plan and the dates of any revisions made to the Plan including the entity who requested the rev
7	Y	9 Description of the nature of construction activity.
9-11	Y	10 Provide vicinity map showing site's relation to surrounding areas. Include designation of specific phase, if neces
7	Y	11 Identify the project receiving waters and describe all sensitive adjacent areas including streams, lakes, residential areas, wetlands, marshlands, etc. which may be affected.
7	Y	12 Design professional's certification statement and signature that the site was visited prior to development of the ES&PC Plan as stated on page 15 of the permit.
	N/A	13 Design professional's certification statement and signature that the permittee's ES&PC Plan provides for an appropriate and comprehensive system of BMPs and sampling to meet permit requirements as stated on page 1
	N/A	14 Clearly note the statement that "The design professional who prepared the ES&PC Plan is to inspect the installation of the initial sediment storage requirements and perimeter control BMPs within 7 days after installation
7	Y	15 Clearly note the statement that "Non-exempt activities shall not be conducted within the 25 or 50-foot undisturbed stream buffers as measured from the point of wrested vegetation or within 25-feet of the coastal marshland buffer as measured from the Jurisdictional Determination Line without first acquiring the necessary variances and permits."
7	Y	16 Provide a description of any buffer encroachments and indicate whether a buffer variance is required.
	N/A	17 Clearly note the statement that "Amendments/revisions to the ES&PC Plan which have a significant effect on BMPs with a hydraulic component must be certified by the design professional."*
	N/A	18 Clearly note the statement that "Waste materials shall not be discharged to waters of the State, except as authorized by a section 404 permit."*
7	Y	19 Clearly note statement that "The escape of sediment from the site shall be prevented by the installation of erosion and sediment control measures and practices prior to land disturbing activities."
9-11	Y	20 Clearly note statement that "Erosion control measures will be maintained at all times. If full implementation of the approved plan does not provide for effective erosion control, additional erosion and sediment control measures shall be implemented to control or treat the sediment source."
7	Y	21 Clearly note the statement "Any disturbed area left exposed for a period greater than 14 days shall be stabilized with mulch or temporary seeding."
	N/A	22 Any construction activity which discharges storm water into an Impaired Stream Segment, or within 1 linear mile upstream of and within the same watershed as, any portion of an Biota Impaired Stream Segment must comply with Part III. C. of the Permit. Include the completed Appendix 1 listing all the BMPs that will be used for those areas of the site which discharge to the Impaired Stream Segment.*
	N/A	23 If a TMDL Implementation Plan for sediment has been finalized for the Impaired Stream Segment (identified in item 22 above) at least six months prior to submittal of NOI, the ES&PC Plan must address any site-specific conditions or requirements included in the TMDL Implementation Plan.*
	N/A	24 BMPs for concrete washdown of tools, concrete mixer chutes, hoppers and the rear of the vehicles. Washout of the drum at the construction site is prohibited.*
7	Y	25 Provide BMPs for the remediation of all petroleum spills and leaks.
	N/A	26 Description of the measures that will be installed during the construction process to control pollutants in storm water that will occur after construction operations have been completed.*
	N/A	27 Description of the practices that will be used to reduce the pollutants in storm water discharges.*
7	Y	28 Description and chart or timeline of the intended sequence of major activities which disturb soils for the major portions of the site (i.e., initial perimeter and sediment storage BMPs, clearing and grubbing activites, excavation activities, utility activities, temporary and final stabilization).
	N/A	29 Provide complete requirements of inspections and record keeping by the primary permittee.*
	N/A	30 Provide complete requirements of sampling frequency and reporting of sampling results.*
	N/A	31 Provide complete details for retention of records as per Part IV.F. of the permit.*
	N/A	32 Description of analytical methods to be used to collect and analyze the samples from each location.*
	N/A	33 Appendix B rationale for NTU values at all outfall sampling points where applicable.*
	N/A	34 Delineate all sampling locations, perennial and intermittent streams and other water bodies into which storm water is discharged.*
	N/A	35 A description of appropriate controls and measures that will be implemented at the construction site including: (1) initial sediment storage requirements and perimeter control BMPs, (2) intermediate grading and drainage BMPs, and (3) final BMPs. For construction sites where there will be no mass grading and the initial perimeter control BMPs, intermediate grading and drainage BMPs, and final BMPs are the same, the plan may combine all of the BMPs into a single phase.*
9-11	Y	36 Graphic scale and North arrow.
9-11	Y	37 Existing and proposed contour lines with contour lines drawn at an interval in accordance with the following:

Map Scale	Ground Slope	Contour Intervals, ft
1 inch = 100ft or larger scale	Flat 0 - 2%	0.5 or 1
	Rolling 2 - 8%	1 or 2
	Steep 8% +	2,5 or 10

Plan Page #	Included Y/N	Item
	N/A	38 Use of alternative BMPs whose performance has been documented to be equivalent to or superior to conventional BMPs as certified by a Design Professional (unless disapproved by EPD or the Georgia Soil and Water Conservation Commission). Please refer to the Alternative BMP Guidance Document found at www.gaswcc.org.
	N/A	39 Use of alternative BMP for application to the Equivalent BMP List. Please refer to Appendix A-2 of the Manual for Erosion & Sediment Control in Georgia 2016 Edition.*
9-11	Y	40 Delineation of the applicable 25-foot or 50-foot undisturbed buffers adjacent to state waters and any additional buffers required by the Local Issuing Authority. Clearly note and delineate all areas of impact.
9-11		41 Delineation of on-site wetlands and all state waters located on and within 200 feet of the project site.
HYDRO		42 Delineation and acreage of contributing drainage basins on the project site.
	N/A	43 Provide hydrology study and maps of drainage basins for both the pre- and post-developed conditions.*
HYDRO		44 An estimate of the runoff coefficient or peak discharge flow of the site prior to and after construction activities are completed.
9-11	Y	45 Storm-drain pipe and weir velocities with appropriate outlet protection to accommodate discharges without erosion. Identify/Delineate all storm water discharge points.
9-10	Y	46 Soil series for the project site and their delineation.
9-11	Y	47 The limits of disturbance for each phase of construction.
9-10	Y	48 Provide a minimum of 67 cubic yards of sediment storage per acre drained using a temporary sediment basin, retrofitted detention pond, and/or excavated sediment traps for each common drainage location. Sediment storage volume must be in place prior to and during all land disturbance activities until final stabilization of the site has been achieved. A written justification explaining the decision to use equivalent controls when a sediment basin is not attainable must be included in the plan for each common drainage location in which a sediment basin is not provided. A written justification as to why 67 cubic yards of storage is not attainable must also be given. Worksheets from the Manual included for structural BMPs and all calculations used by the storage design professional to obtain the required sediment storage using equivalent controls. When discharging from sediment basins and impoundments, permittees are required to utilize outlet structures that withdraw water from the surface, unless infeasible. If outlet structures that withdraw water from the surface are not feasible, a written justification explaining this decision must be included in the plan.
9-11	Y	49 Location of Best Management Practices that are consistent with and no less stringent than the Manual for Erosion and Sediment Control in Georgia. Use uniform coding symbols from the Manual, Chapter 6, with legend.
	Y	50 Provide detailed drawings for all structural practices. Specifications must, at a minimum, meet the guidelines set forth in the Manual for Erosion and Sediment Control in Georgia.
8		51 Provide vegetative plan, noting all temporary and permanent vegetative practices. Include species, planting dates and seeding, fertilizer, lime and mulching rates. Vegetative plan shall be site specific for appropriate time of the year that seeding will take place and for the appropriate geographic region of Georgia.

*If using this checklist for a project that is less than 1 acre and not part of a common development but within 200 ft of a perennial stream the * checklist items would be N/A.

Effective January 1, 2018

GEORGIA UNIFORM CODING SYSTEM

FOR SOIL EROSION AND SEDIMENT CONTROL PRACTICES
STATE SOIL AND WATER CONSERVATION COMMISSION OF GEORGIA

STRUCTURAL PRACTICES

CODE	PRACTICE	DETAIL	MAP SYMBOL	DESCRIPTION
Sd1	SEDIMENT BARRIER			A barrier to prevent sediment from leaving the construction site. It may be sandbags, bales of straw or hay, brush, logs and poles, gravel, or a silt fence.
Sd2	INLET SEDIMENT TRAP			An impounding area created by excavating around a storm drain drop inlet. The excavated area will be filled and stabilized on completion of construction activities.

VEGETATIVE PRACTICES

CODE	PRACTICE	DETAIL	MAP SYMBOL	DESCRIPTION
Ds1	DISTURBED AREA STABILIZATION (WITH MULCHING ONLY)		Ds1	Establishing temporary protection for disturbed areas where seedlings may not have a suitable growing season to produce an erosion retarding cover.
Ds2	DISTURBED AREA STABILIZATION (WITH TEMP SEEDING)		Ds2	Establishing a temporary vegetative cover with fast growing seedings on disturbed areas.
Ds3	DISTURBED AREA STABILIZATION (WITH PERM SEEDING)		Ds3	Establishing a permanent vegetative cover such as trees, shrubs, vines, grasses, or legumes on disturbed areas.

Dust Control on Disturbed Areas (Du)

DEFINITION
Controlling surface and air movement of dust on construction sites, roads, and demolition sites.

PURPOSE
- To prevent surface and air movement of dust from exposed soil surfaces.
- To reduce the presence of airborne substances that may be harmful or injurious to human health, welfare, or safety, or to animals or plant life.

CONDITIONS
This practice is applicable to areas subject to surface and air movement of dust where on and off-site damage may occur without treatment.

METHOD AND MATERIALS

A. Temporary Methods

Mulches. See standard **Ds1 - Disturbed Area Stabilization (With Mulching Only)**. Synthetic resins may be used instead of asphalt to bind mulch material. Refer to specification **Tac - Tackifiers**. Resins should be used according to manufacturer's recommendations.

Vegetative Cover. See specification **Ds2 - Disturbed Area Stabilization (With Temporary Seeding).**

Spray-on Adhesives. These are used on mineral soils (not effective on muck soils). Keep traffic off these areas. Refer to specification **Tac - Tackifiers.**

Tillage. This practice is designed to roughen and bring clods to the surface. It is an emergency measure that should be used before wind erosion starts. Begin plowing on windward side of site. Chisel-type plows spaced about 12 inches apart, spring-toothed harrows, and similar plows are examples of equipment that may produce the desired effect.

Irrigation. This is generally done as an emergency treatment. Site is sprinkled with water until the surface is wet. Repeat as needed.

Barriers. Solid board fences, snowfences, burlap fences, crate walls, bales of hay and similar material can be used to control air currents and soil blowing. Barriers placed at right angles to prevailing currents at intervals of about 15 times their height are effective in controlling wind erosion.

Calcium Chloride. Apply at rate that will keep surface moist. May need retreatment.

B. Permanent Methods

Permanent Vegetation. See specification **Ds3 - Disturbed Area Stabilization (With Permanent Vegetation).** Existing trees and large shrubs may afford valuable protection if left in place.

Topsoiling. This entails covering the surface with less erosive soil material. See specification **Tp - Topsoiling.**

Stone. Cover surface with crushed stone or coarse gravel. See specification **Cr-Construction Road Stabilization.**

GSWCC 2016 Edition 6-55

Disturbed Area Stabilization (With Mulching Only) (Ds1)

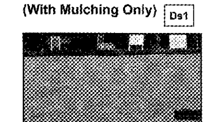

DEFINITION
Applying plant residues or other suitable materials, produced on the site if possible, to the soil surface.

PURPOSE
- To reduce runoff and erosion
- To conserve moisture
- To prevent surface compaction or crusting
- To control undesirable vegetation
- To modify soil temperature
- To increase biological activity in the soil

REQUIREMENT FOR REGULATORY COMPLIANCE
Mulch or temporary grassing shall be applied to all exposed areas within 14 days of disturbance. Mulch can be used as a singular erosion control device for up to six months, but it shall be applied at the appropriate depth, depending on the material used, anchored and have a continuous 90% cover or greater of the soil surface.

Maintenance shall be required to maintain appropriate depth and 90% cover. Temporary vegetation may be employed instead of mulch if the area will remain undisturbed for less than six months.

If any area will remain undisturbed for greater than six months, permanent vegetative techniques shall be employed. Refer to **Ds2 - Disturbed Area Stabilization (With Temporary Seeding), Ds3 - Disturbed Area Stabilization (With Permanent Seeding), and Ds4 - Disturbed Area Stabilization (With Sodding).**

SPECIFICATIONS
Mulching Without Seeding
This standard applies to graded or cleared areas where seedings may not have a suitable growing season to produce an erosion retardant cover, but can be stabilized with a mulch cover.

Site Preparation
1. Grade to permit the use of equipment for applying and anchoring mulch.
2. Install needed erosion control measures as required such as dikes, diversions, berms, terraces and sediment barriers.
3. Loosen compact soil to a minimum depth of 3 inches.

Mulching Materials
Select one of the following materials and apply at the depth indicated:
1. Dry straw or hay shall be applied at a depth of 2 to 4 inches providing complete soil coverage. One advantage of this material is easy application.
2. Wood waste (chips, sawdust or bark) shall be applied at a depth of 2 to 3 inches. Organic material from the clearing stage of development should remain on site, be chipped, and applied as mulch. This method of mulching can greatly reduce erosion control costs.
3. Polyethylene film shall be secured over banks or stockpiled soil material for temporary protection. This material can be salvaged and re-used.

Applying Mulch
When mulch is used without seeding, mulch shall be applied to provide full coverage of the exposed area.
1. Dry straw or hay mulch and wood chips shall be applied uniformly by hand or by mechanical equipment.
2. If the area will eventually be covered with perennial vegetation, 20-30 pounds of nitrogen per acre in addition to the normal amount shall be applied to offset the uptake of nitrogen caused by the decomposition of the organic mulches.
3. Apply polyethylene film on exposed areas.

Anchoring Mulch
1. Straw or hay mulch can be pressed into the soil with a disk harrow with the disk set straight or with a special "packer disk." Disks may be smooth or serrated and should be 20 inches or more in diameter and 8 to 12 inches apart. The edges of the disk should be dull enough not to cut the mulch but to press it into the soil leaving much of it in an erect position. Straw or hay mulch shall be anchored immediately after application.

Straw or hay mulch spread with special blower-type equipment may be anchored. Tackifiers, binders and hydraulic mulch with tackifier specifically designed for tacking straw can be substituted for emulsified asphalt. Please refer to specification **Tac-Tackifiers.** Plastic mesh or netting with mesh no larger than one inch by one inch may be installed according to manufacturer's specifications.

2. Netting of the appropriate size shall be used to anchor wood waste. Openings of the netting shall be larger than the average size of the wood waste chips.
3. Polyethylene film shall be anchor trenched at the top as well as incrementally as necessary.

6-28 GSWCC 2016 Edition

Disturbed Area Stabilization (With Temporary Seeding) (Ds2)

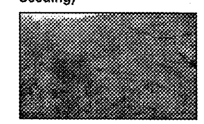

DEFINITION
The establishment of temporary vegetative cover with fast growing seedings for seasonal protection on disturbed or denuded areas.

PURPOSE
- To reduce runoff and sediment damage of down stream resources
- To protect the soil surface from erosion
- To improve wildlife habitat
- To improve aesthetics
- To improve tilth, infiltration and aeration as well as organic matter for permanent plantings

REQUIREMENT FOR REGULATORY COMPLIANCE
Mulch or temporary grassing shall be applied to all exposed areas within 14 days of disturbance. Temporary grassing, instead of mulch, can be applied to rough graded areas that will be exposed for less than six months. If an area is expected to be undisturbed for longer than six months, permanent perennial vegetation shall be used. If optimum planting conditions for temporary grassing is lacking, mulch can be used as a singular erosion control device for up to six months but it shall be applied at the appropriate depth, anchored, and have a continuous 90% cover or greater of the soil surface. Refer to specification **Ds1-Disturbed Area Stabilization (With Temporary Seeding).**

CONDITIONS
Temporary vegetative measures should be coordinated with permanent measures to assure economical and effective stabilization. Most types of temporary vegetation are ideal to use as companion crops until the permanent vegetation is established. Note: Some species of temporary vegetation are not appropriate for companion crop plantings because of their potential to out-compete the desired species (e.g. annual ryegrass). Contact NRCS or the local SWCD for more information.

SPECIFICATIONS
Grading and Shaping
Excessive water run-off shall be reduced by properly designed and installed erosion control practices such as closed drains, ditches, dikes, diversions, sediment barriers and others.

No shaping or grading is required if slopes can be stabilized by hand-seeded vegetation or if hydraulic seeding equipment is to be used.

Seedbed Preparation
When a hydraulic seeder is used, seedbed preparation is not required. When using conventional or hand-seeding, seedbed preparation is not required if the soil material is loose and not sealed by rainfall.

When soil has been sealed by rainfall or consists of smooth cut slopes, the soil shall be pitted, trenched or otherwise scarified to provide a place for seed to lodge and germinate.

Lime and Fertilizer
Agricultural lime is required unless soil tests indicate otherwise. Apply agricultural lime at a rate determined by soil test for pH. Quick acting lime should be incorporated to modify pH during the germination period. Bio atimulants should also be considered when there is less than 3% organic matter in the soil. Graded areas require lime application. Soils must be tested to determine required amounts of fertilizer and amendments. Fertilizer should be applied before land preparation and incorporated with a disk, ripper, or chisel. On slopes too steep for, or inaccessible to equipment, fertilizer shall be hydraulically applied, preferably in the first pass with seed and some hydraulic mulch, then topped with the remaining required application rate.

GSWCC 2016 Edition 6-29

Disturbed Area Stabilization (With Permanent Vegetation) (Ds3)

DEFINITION
The planting of perennial vegetation such as trees, shrubs, vines, grasses, or legumes on exposed areas for final permanent stabilization. Permanent perennial vegetation shall be used to achieve final stabilization.

PURPOSE
- To protect the soil surface from erosion
- To reduce damage from sediment and runoff to down-stream areas
- To improve wildlife habitat and visual resources
- To improve aesthetics

REQUIREMENT FOR REGULATORY COMPLIANCE
This practice shall be applied immediately to rough graded areas that will be undisturbed for longer than six months. This practice or sodding shall be applied immediately to all areas at final grade. **Final Stabilization** means that all soil disturbing activities at the site have been completed, and that for unpaved areas and areas not covered by permanent structures and areas located outside the waste disposal limits of a landfill cell that has been certified by the GA EPD for waste disposal, 100% of the soil surface is uniformlycovered in permanent vegetation with a density of 70% or greater, or landscaped according to the Plan (uniformly covered with landscaping materials in planned landscaped areas), or equivalent permanent stabilization measures.

Permanent vegetation shall consist of: planted trees, shrubs, perennial vines; or a crop of perennial vegetation appropriate for the region, such that within the growing season a 70% coverage by perennial vegetation shall be achieved. Final stabilization applies to each phase of construction. For linear construction projects on land used for agricultural or silvicultural purposes, final stabilization may be accomplished by stabilizing the disturbed land for its agricultural or silvicultural use. Until this standard is satisfied and permanent control measures and facilities are operational, interim stabilization measures and temporary erosion and sedimentation control measures shall not be removed.

CONDITIONS
Permanent perennial vegetation is used to provide a protective cover for exposed areas including cuts, fills, dams, and other denuded areas.

PLANNING CONSIDERATIONS
1. Use conventional planting methods where possible.
2. When mixed plantings are done during marginal planting periods, companion crops shall be used.
3. No-till planting is effective when planting is done following a summer or winter annual cover crop. Sericea lespedeza planted no-till into stands of rye is an excellent procedure.
4. Block sod provides immediate cover. It is especially effective in controlling erosion adjacent to concrete flumes and other structures. Refer to Specification **Ds4-Disturbed Area Stabilization (With Sodding).**
5. Irrigation should be used when the soil is dry or when summer plantings are done.
6. Low maintenance plants, as well as natives, should be used to ensure long-lasting erosion control.
7. Mowing should not be performed during the quail nesting season (May to September).
8. Wildlife plantings should be included in critical area plantings.

GSWCC 2016 Edition 6-35

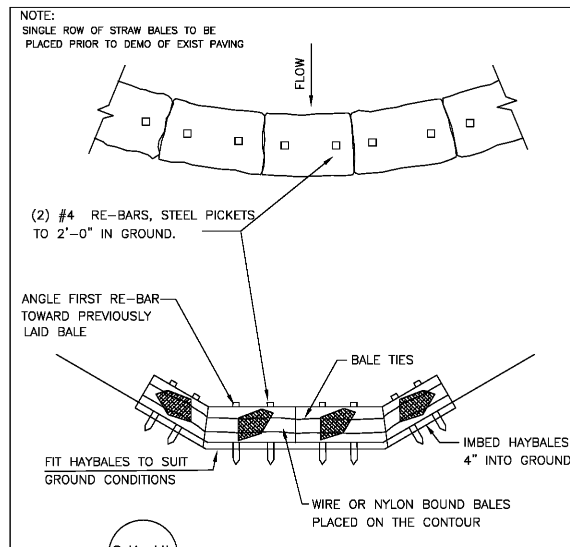

SECTION
HAYBALE SEDIMENT TRAP

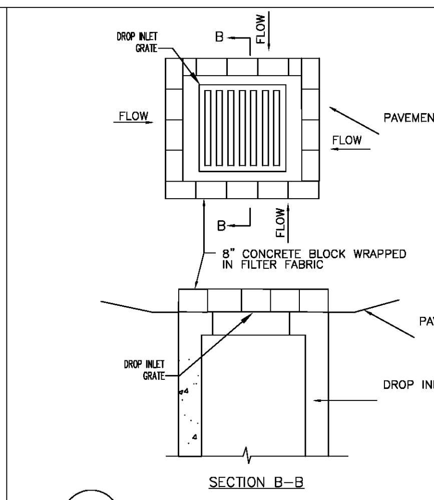

NOTE
INSTALL FILTER AROUND EXISTING STRUCTURE ON EXISTING ASPHALT.

"PIGS IN BLANKET"
DRAIN INLET FILTER

PRO BUILDING SYSTEMS
DESIGN BUILD CONTRACTORS
3678 North Peachtree Road
Atlanta, Georgia 30341
(770) 455-1791 / Fax 455-4123
www.probldgsystems.com

OWNER/DEVELOPER/ PRIMARY PERMITTEE:
JBE REAL ESTATE HOLDINGS, LLLP
5880 PEACHTREE BOULEVARD
ATLANTA, GA 30341
770.454.8200 (Ph)

24-HR CONTACT:
STEVE ELLIS
770.455.1791 (Ph)

ENGINEER:
EVANS DESIGN GROUP, INC
4755 SUMMER SONG COURT
BUFORD, GEORGIA 30519
678.207.6830 (Ph)
CONTACT: JON M. EVANS, P.E.

GSWCC
GEORGIA SOIL AND WATER CONSERVATION COMMISSION
JON M. EVANS, P.E.
Level II Certified Design Professional
CERTIFICATION NUMBER 0000010877
ISSUED: 05-16-2006 EXPIRES: 05-16-2021

Evans Design Group, Inc.
Civil Engineering / Site Planning / Land Development Services
4755 Summer Song Court
Buford, GA 30519
(Ph) 678.207.6830
jevans@evansdg.com

GEORGIA REGISTERED NO. 26661 PROFESSIONAL ENGINEER JON M. EVANS
GSWCC LEVEL II CERT. # 10877

PROJECT NAME
JIM ELLIS CADILLAC

5880 PEACHTREE BLVD
L.L. 323, 18th DISTRICT
CITY OF CHAMBLEE
GEORGIA

DATE: 03-22-18

DESIGN BY	DRAWN BY	CHECKED BY
JME	JME	JME

☐ Not Released For Construction
■ Released For Construction

OWNER/DEVELOPER

© COPYRIGHT 2018
EVANS DESIGN GROUP, INC
..ALL RIGHTS RESERVED..
THESE CONSTRUCTION DOCUMENTS AND PERMITTED REPRODUCTIONS, IN WHOLE OR IN PART, ARE INSTRUMENTS OF SERVICE AND ARE THE SOLE PROPERTY OF EVANS DESIGN GROUP, INC. UNLESS OTHERWISE AGREED TO. THEY SHALL NOT BE REPRODUCED OR CONVEYED IN ANY MANNER NOR ARE THEY TO BE USED FOR ANY OTHER PROJECTS OTHER THAN THAT SPECIFICALLY INDICATED HEREIN WITHOUT WRITTEN PERMISSION FROM AND DUE COMPENSATION TO EVANS DESIGN GROUP, INC.

REVISIONS

1	10-16-2018
	FIRST SUBMITTAL
2	11-16-2018
	CITY COMMENTS

JOB NUMBER: 18-011

SHEET TITLE
E.C. DETAILS

C-8

Order Plans @ www.LDILine.com