## Morgan ThermalCeramics

### FireMaster® FastWrap® XL

Datasheet Code US: 7-14-236 MSDS Code US: 405

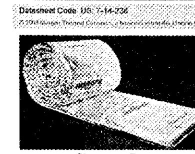

Grease Duct Enclosure System
Air Ventilation Duct Enclosure System
Product Data & Installation Guide

**1. Product Description**

FireMaster® FastWrap XL is a flexible blanket comprised of high temperature fibers classified for applications to 2192°F (1200°C) and fully encapsulated in a durable glass fiber reinforced foil facing for easy handling and installation. FastWrap XL is UL and ULC Listed for 1 and 2 hour fire resistive enclosure protection, zero clearance for kitchen exhaust ducts, electrical circuit protection, and as a component in UL firestop designs for fire resistance rated floors, ceilings, and walls. The core fibers in FastWrap XL are manufactured using Morgan Thermal Ceramics patented Superwool® fiber which is an alkaline-earth silicate wool with low biopersistence and therefore increased safety for installers. FastWrap XL is under UL's Follow-Up Service Program to ensure the consistent quality essential to this life-safety application.

**Product Features**

- Thin and Lightweight at 1-1/2" (38mm) thick, 6 pcf (96 kg/m³) density
- Contours easily to complex duct designs
- Grease duct insulation UL Listed with butt joints on all seams on both layers
- Fully foil encapsulated for fast and clean installation
- Contains 2192°F (1200°C) rated fibers
- GreenGuard Microbial Resistance Listing
- Good sound absorption
- Complies to IMC, NFPA 96, UMC, CMC

**2. Applications**

- 1 and 2 hour enclosure and firestop system for kitchen exhaust ducts
- Zero clearance to combustibles for kitchen exhaust ducts
- 1 and 2 hour enclosure and firestop system for hazardous exhaust ducts, pressurization ducts, clothes dryer exhaust ducts, trash and linen chutes, and other fire rated HVAC ducts
- 1 hour electrical circuit integrity protection
- Engineered and tested solutions for fire protection of structural steel and storage vessels per ASTM E119, ISO 834, and UL1709

**3. Specifications - Division 23 07 00 (or 15080)**

CSI Spec and AutoCAD available online.

FireMaster FastWrap XL is a flexible high temperature insulation rated to 2192°F (1200°C) that is fully encapsulated in FSP facing. The duct enclosure system shall be listed by UL per ASTM E 2336 and ISO 6944 for 1-, 2- and 3-hour rating and zero clearance to combustibles, and tested per ASTM E84 for a flame/smoke rating less than 25/50. Insulation shall have a nominal thickness of 1-1/2 inches (38 mm) and density of 6 lbs/ft³ (96 kg/m³). Insulation shall have a R-Value of 7.3 at 75 F. Installation shall be in strict accordance to manufacturer's published installation instructions, UL Listings, and shop drawings. FireMaster FastDoor XL shall be used for duct access where specified or as required by code.

www.morganthermalceramics.com

**4. Physical Characteristics**

| Product | Unit | Size | Units/Ctn. | Wt./Ctn. |
|---|---|---|---|---|
| FastWrap XL | Roll | 1-1/2" x 24" x 25' | 1 | 37.5 lbs |
| FastWrap XL | Roll | 1-1/2" x 48" x 25' | 1 | 75 lbs |

**5. Performance Specifications**

| Reference Standard | Standard No. | Performance |
|---|---|---|
| Grease Duct Enclosure System | ASTM E2336 | Pass |
| Section 18.1 - Non-Combustibility | ASTM E136 | Pass |
| Section 10.2 - Fire Resistance (wall) | ASTM E119 | Pass |
| Section 16.3 - Durability Test | ASTM C518 | Pass |
| Section 16.7 - Internal Fire Test | ASTM E2336 | Pass |
| Section 16.8 - Fire Engulfment (duct) | ASTM E814/E119 | Pass |
| ULC Grease Duct Test Protocol | | Pass |
| Grease Duct Clearance | UL 1978 | Pass |
| Air Ventilation Duct Enclosure | ISO 6944 | Pass |
| Surface Burning Characteristics | ASTM E84 | <25/50 |
| Thermal Resistance (R-value @ 75°F) | ASTM C518 | 7.3 per layer |
| Mold Growth | ASTM C1338 | ULC Validated |
| | ASTM D6329 | GreenGuard |
| Low VOCs | CA Standard 01350 | UL Validated |

**6. Listings/Building Code Reports**

| Listed Uses | Agency | Listing | Layers |
|---|---|---|---|
| Grease Duct Enclosure per ASTM E2336 and AC101 (2006, 2009, 2012 IBC, NFPA 96, UMC, CMC) | UL | G18 | 2 |
| | ICC ES | ESR 2213 | |
| Grease Duct Insulation per ULC Grease Duct Insulation Test Protocol | ULC | FRD 4, 7 | 2 |
| Grease Duct Insulation (2000 IMC) | OPL | YCOB 120-01 | 1 |
| Through Penetration FireStop System per ASTM E814, UL 1479 | UL / ULC | See Figure 2 | 1 or 2 |
| 1- or 2-hour Ventilation Duct Enclosure per ISO 6944-1985 | UL | RNLJ V1, 19, 20 | 1 |
| | ULC | FRD 3, 5, 6, 15 | |
| 3-hour Ventilation Duct Enclosure per ISO 6944-1985 | UL | RNLJ V2 | 2 |
| Electrical Circuit Protective System | UL | FHIT[illegible] | 2 |

**7. Storage**

FastWrap XL must be stored in a dry warehouse environment on pallets. Pallets should not be stacked.

**8. Installation**

FastWrap XL shall be installed by a qualified contractor in accordance with manufacturer's instructions and laboratory design listings.

**Materials and Equipment**

- FastWrap XL blanket
- Aluminum foil tape
- Glass filament reinforced tape (optional)
- Carbon steel or stainless steel banding material, minimum 1/2" (13mm) wide, minimum 0.015" (0.4mm) thick, with steel banding clips
- Hand banding tensioner and crimping tool
- Minimum 12 gage (3mm) steel insulation pins, steel speed clips, minimum 1-1/2" (38mm) square or 1-1/2" (38mm) diameter, or equivalent steel cup-head pins
- Capacitor discharge stud gun
- Morgan Thermal Ceramics FastDoor XL
- An approved firestop sealant

www.morganthermalceramics.com

### FireMaster® FastWrap® XL

**General**

Cut edges of the blanket shall be taped with aluminum foil tape to prevent exposed edges of the insulation absorbing grease and moisture in the event of a compromised grease duct joint or condensation. Overlaps and/or tightly butted joints are used to block heat transfer in the event of duct deformation resulting from thermal expansion. Filament tape is suggested to hold the blanket in place until steel banding or pinning is installed to permanently secure the blanket.

**A. Installation on Grease Duct per ASTM E2336 (Figure 1)**

System requires two layers of insulation applied directly to the duct with tight butt joints at all seams on both layers. The first layer of insulation is cut to a length sufficient to wrap around the duct and provide a tight butt joint where the blanket ends meet. Adjacent blankets on the first layer are butted tightly together with longitudinal seams offset minimum 6" (150mm). The second layer of insulation is installed in the same method as the first layer, with seams between layers offset a minimum of 6" (150mm). Banding and/or pinning per Section D is used to permanently secure the insulation to the duct.

**B. Installation on HVAC Duct per ISO 6944 or Grease Duct per UL1978 (Figure 1)**

System requires one layer of insulation applied directly to the duct with 3" (75mm) overlaps at all seams. The insulation is cut to a length sufficient to wrap around the duct and provide a 3" (75mm) overlap where the blanket ends meet. Adjacent blankets are installed to provide a minimum overlap of 3" (75mm). Banding and/or pinning per Section D is used to permanently secure the insulation to the duct.

**C. 2 & 3 Sided Wrap Installation (Figure 4)**

When space does not allow for a complete wrap applied to the duct on all four sides, the FastWrap XL is approved for 2 or 3 sided installations with mechanical attachment to a rated concrete or CMU assembly. (See Figure 4 for installation details.)

**D. Mechanical Attachment Methods**

1) **Banding (Figure 1)** - Minimum 1/2" (13mm) wide carbon steel or stainless steel banding, 0.015" (0.4mm) thick, is placed around the entire perimeter of the insulated duct on maximum 10-1/2" (270mm) centers and 1-1/2" (38mm) from each blanket edge or 1-1/2" (38mm) from each collar edge when using the butt joint and collar method. The banding is placed around the blanket and tightened to firmly hold the FastWrap XL in place against the duct, but not cause any cutting or damage to the blanket.

2) **Pinning** - Pinning on all sides of the duct may be used as an alternative to banding. For ducts wider than 24" (610mm) pinning is required on the bottom of horizontal runs, or on one side of vertical runs (in addition to steel banding). When applicable, 12 Gage (2.4mm) steel pins are installed on 12" (305mm) centers along the width of the duct and 10-1/2" (270mm) centers along the length of the duct. Pins that extend beyond the outer blanket layer shall be turned down or the excessive length cut off to prevent sharp edges. Shoot through pins (cup head pins) may be used in conjunction with steel banding to prevent blanket sag.

**E. Access Doors**

1) **FastDoor™ XL (Figure 3)** - FastDoor XL is a UL Listed, liquid tight duct cover panel supplied complete with a single layer insulation cover per UL Listing HNKT G10. The FastDoor XL is installed per included installation instructions. No field welding is required.

2) **Field Fabricated Access Doors** - Each access door assembly has four threaded rods 1/4 inch (6mm) in diameter and 5" (127mm) in length, with one welded to each corner of the door opening. Hollow steel tubes, 4-1/2" (114mm) long are installed outside the access cover plate and over the threaded rods. Four 12 gage (3mm) and 4-1/2" (114mm) long steel insulation pins are welded to the access cover plate to allow for installation of the three layers of FastWrap XL. One layer of FastWrap XL is cut to approximately the same size as the access panel, and impaled over the insulation pins on the panel. A second layer of FastWrap XL is cut so as to overlap the first layer a minimum of 1-1/2" (38mm). It is essential that the first and second layer fit tightly against the surrounding wrap with no through openings. The third and outside layer should be cut to overlap the second insulation layer by a minimum of 1-1/2" (38mm). Minimum 1-1/2" (38mm) round or square insulation clips are installed on the insulation pins to secure the three layers of insulation to the access cover plate. All cut edges of the insulation shall be taped with minimum 3" (75mm) wide aluminum foil tape. Wing nuts and washers are installed on the four threaded rods, and tightened against the hollow steel tubes to seal the access cover plate to the duct.

**F. Through Penetration Firestop System (Figure 2)** - When the duct penetrates a fire rated assembly an approved fire stop system must be employed. Figure 2 provides a complete list of UL / ULC firestop design listings which can be found in the Certifications Directory at www.ul.com for US systems and www.ulc.ca for Canadian systems. Prior to installing any firestop system the surfaces of all openings and penetrating items must be clean and dry. The FastWrap XL core blanket (or mineral wool where allowed by the firestop design listing) must be compressed into the annular space. The packing material must be recessed a minimum depth from the surface of the concrete or gypsum assembly. The recessed opening must be filled with a minimum thickness of an approved firestop sealant. The packing material type and compression, minimum recess (typically 1/4" (6mm)), and approved firestop sealant and thickness (typically 1/4" (6mm)) shall be as specified in an approved UL / ULC firestop design listing. When there is not sufficient annular space around the duct to run the FastWrap XL enclosure system continuous through the fire rated assembly, the enclosure may terminate above and below the floor/ceiling assembly or on either side of a wall assembly as shown in Figure 2. When this method is used, the FastWrap XL must be mechanically attached on either side of the fire rated assembly using one of the attachment methods described in Section D, spaced a maximum of 1-1/2" (38mm) from the fire rated assembly.

**G. Support Hanger Systems**

1) **Grease ducts:** Trapeze support hangers shall be spaced on maximum 60 in. (1500 mm) centers. Hanger rods or straps shall be anchored with steel drop in or wedge expansion type masonry anchors. No additional protection is required for hangers and supports meeting the requirements of the Table below.

| Hanger Design Section | Maximum Perimeter in (mm) | Trapeze Support for equivalent Yield Strength), in (mm) |
|---|---|---|
| 50/50 Grease Duct/Enclosure | 144 (3658) | 2 (51) x 2 (51) x 3/16 (5) angle |

2) **HVAC ducts:** Trapeze support hangers shall be spaced on maximum 60 in. (1500 mm) centers. Hanger rods or straps shall be anchored with steel drop in or wedge expansion type masonry anchors. No additional protection is required for hangers and supports meeting the requirements of the Table below.

| Hanger Cross Section | Max. Perimeter in (mm) | Trapeze Support (or equivalent Yield Strength), in (mm) |
|---|---|---|
| 1/4 in x 16 gage strap (25 mm x 1.6 gage strap) | 160 (5080) | |
| 3/8 in (9 mm) threaded rod | 50 (1270) | 1/2 (13) x 1/2 (13) x 3/16 (5) angle |
| 1/2 in (13 mm) threaded rod | 155 (3870) | 1-1/2 (38) x 1-1/2 (38) x 3/16 (5) angle |
| 1/2 in (12.7 mm) threaded rod | 220 (5588) | 2 (51) x 2 (51) x 3/8 (9) angle |

**9. Maintenance and Repair**

No maintenance is required when installed in accordance with Morgan Thermal Ceramics (MTC) installation instructions. If damage is limited to the foil facing, aluminum foil tape can be used to repair the foil facing. If an area of blanket is found to be damaged, the following procedure must be incorporated. If the damaged area is larger than 8" (203mm) x 8" (203mm) the entire wrap section must be removed and replaced according to MTC installation instructions. If the damaged area is small (less than 8" (203mm) x 8" (203mm)), the damaged area must be cut away and replaced with a new section 1" (25mm) larger in length and width than the cut out, such that the new section can be compressed tightly into the cut out area. All cut edges of the new section must be taped and sealed with aluminum foil tape. The new section must be held in place with either pinning or banding per MTC installation instructions.

**10. Limitations**

Morgan Thermal Ceramics FireMaster FastWrap XL shall be installed in accordance with these installation instructions and appropriate laboratory design listings. The integrity of FastWrap XL systems is limited to the quality of the installation.

www.morganthermalceramics.com

### FireMaster® FastWrap® XL

1 or 2 Hour Shaft Alternative / Zero Clearance to Combustibles

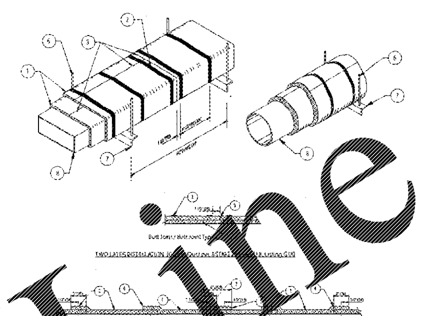


| FIGURE 1 | |
|---|---|
| 1 | Two Layers of XL for ASTM E2336 Grease Duct Enclosures per UL Listing G18 |
| 2 | One Layer of XL for Air Ventilation Duct Enclosures per UL Listing V19 |
| 3 | Steel banding min. 1/2" (13) wide by 0.015" (0.4) thick |
| 4 | Tight butt joints (ULC ...) or 3" (75) overlap |
| 5 | Min. 3" (75) overlap ... between adjacent blankets |
| 6 | Optional 6" XL collar |
| 7 | Hangers - size dependent on weight of assembly (see datasheet Section G) |
| 8 | ... Supports - dependent on weight of assembly (see datasheet Section G) |
| 9 | Rectangular or Round Duct (size, gage and construction dependent per Listed Design) |

www.morganthermalceramics.com

### FireMaster® FastWrap® XL

Commercial Kitchen Grease Duct Enclosure System
Air Ventilation Duct Enclosure System
Through Penetration Firestop Systems

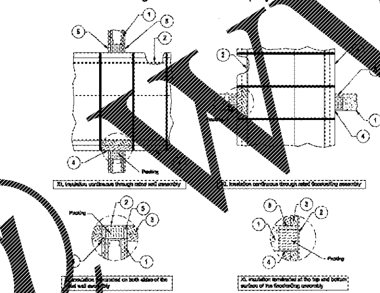


Firestop Designs per ASTM E814 / UL 1479 - Consult UL / ULC Directories for System Details

| UL Listing | F- & T-Rating | (1) Floor/Wall | (2) Penetrant | (3) Enclosure Pen | (4) Termination | (5) Firestop Sealant Details |
|---|---|---|---|---|---|---|
| C-AJ-7012 | 2-hour | Concrete/CMU | 64x24; 26 Ga Duct | V19; FRD3, 5, 15 | wrap through | 1/2 in; STI; Tremco |
| C-AJ-7014 | 3-hour | Concrete/CMU | 64x24; 26 Ga Duct | V2; | wrap through | 1/2 in; STI; Tremco |
| C-AJ-7019 | 1 or 2-hour | Concrete/CMU | 64x24; 26 Ga Duct | V19; FRD3, 5, 15 | terminate at | 1/4 in; STI; Tremco |
| C-AJ-7021 | 2-hour | Concrete/CMU | 48x24; 16 Ga Duct | G18; FRD4, 7 | terminate at | 1/4 in; STI; Tremco |
| C-AJ-7056 | 2-hour | Concrete/CMU | 30x30; 22 Ga Duct | V19; FRD3, 5, 15 | wrap through | 1/4 in; STI; Hilti; Rectorseal; Tremco |
| C-AJ-7[illegible] | 2-hour | Concrete/CMU | 48x24; 16 Ga Duct | G18; FRD4, 7 | wrap through | 1/4 in; STI; Hilti; Rectorseal; Tremco |
| [illegible] | 1 or 2-hour | Wood/Gyp Floor | 24x12; 16 Ga Duct | G18; FRD4; 7 | wrap through | 1/4 in; STI; Hilti; Rectorseal; Tremco |
| F-C-7066 | 1-hour | Wood/Gyp Floor | 4 Dia; 30 Ga Duct | V20; FRD26 | wrap through | 1/4 in; STI |
| W-J-7058 | 2-hour | Concrete/CMU Wall | 100x100; 26 Ga Duct | V19; FRD3/5; 10 | terminate at | 1/4 in; STI |
| W-L-7121 | 1 or 2-hour | Gyp Wall | 30x30; 16 Ga Duct | G18; FRD5; 7 | wrap through | 1/4 in; STI; Hilti; Rectorseal; Tremco |
| W-L-7145 | 1 or 2-hour | Gyp Wall | 100x100; 26 Ga Duct | V19; FRD3; 5; 15 | terminate at | 5/8 in; STI |

www.morganthermalceramics.com

### FireMaster® FastWrap® XL

FASTDOOR XL Access Door Systems

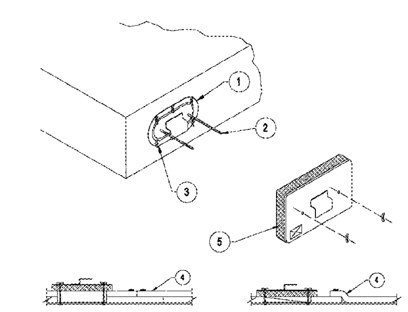


| Legend | |
|---|---|
| 1 | UL listed FastDoor XL access panel |
| 2 | All Thread Rods and wing nuts |
| 3 | Retainer Clips with threaded nut and wing bolts |
| 4 | Insulation layers as required by UL or ITS Listings |
| 5 | FastDoor XL; 1-1/2 inch thick single layer insulation |

FastDoor XL1 Access Doors Sizes

| Available Opening Sizes | Ordering Code |
|---|---|
| 10" x 8" Door Opening | 434-8970-034-89X1 |
| 12" x 8" Door Opening | 434-8970-035-89X1 |
| 12" x 12" Door Opening | 434-8970-036-89X1 |
| 16" x 12" Door Opening | 434-8970-037-89X1 |
| 20" x 20" Door Opening | 434-8970-038-89X1 |

www.morganthermalceramics.com

### FireMaster® FastWrap® XL

2 and 3 Sided Wrap Detail for Attaching to Walls and/or Ceilings

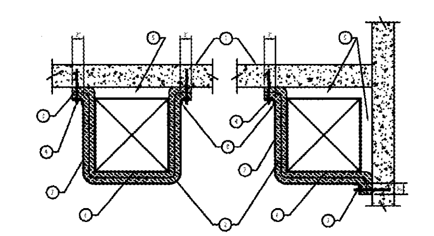

| FIGURE 4 | |
|---|---|
| 1 | 1 or 2 Hour Rated Concrete floor, ceiling, or wall |
| 2 | Insulation layers as required by UL and ULC Listings (see datasheet Section 6) |
| 3 | Concrete fastener system |
| 4 | 3/16" (5) thick x 2" (50) - 3" (75) wide bar stock perforated 12" (305) o.c. |
| 5 | 8" (203) maximum Air Gap |
| 6 | Duct (independently supported as required by code) |
| 7 | Steel banding min. 1/2" (13) wide by 0.015" (0.4) thick |
| 8 | Banding clip |

www.morganthermalceramics.com

Order Plans @ WWW.LDILine.com

architect + engineer

wd PARTNERS
brand : operations : build
7007 DISCOVERY BLVD
DUBLIN, OH 43017
614.634.7000 T
WDPARTNERS.COM

project no. | KRKDS0003

owner

Krispy Kreme DOUGHNUTS®
225 VARICK STREET, SUITE 301
NEW YORK, NY 10014

project info

CONCORD
NORTH CAROLINA

issue dates

| submission: | Date |
|---|---|
| OWNER/LL REVIEW | 11/01/2018 |
| BID SET | 11/01/2018 |
| PERMIT SET | 11/01/2018 |

revisions:

| # | Description | Date |
|---|---|---|

mechanical

seal

NORTH CAROLINA PROFESSIONAL ENGINEER SEAL 039288 JEFFREY P. BOLYARD
NOV 02 2018

sheet info

MECHANICAL HOOD DETAILS
# M502

BIM 360://KRKNS0002 - NC_Concord/KRKNS0002_Concord_NC_MEP_R17.rvt
11/1/2018 4:15:50 PM