Drawing name: \\192.168.111.11\lecraw engineering\005031 - RaceTrac - Cartersville (E Main Street)_GA\CADD\CONSTR\005031 - 09 - DETAILS.dwg CONSTRUCTION DETAILS - 6 Sep 05, 2018 7:57am by: tradd.anderson

Hydro International

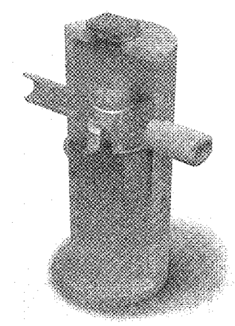

Operation and Maintenance Manual

First Defense® and First Defense®-HC

Vortex Separator for Stormwater Treatment

Stormwater Solutions
Turning Water Around ...®

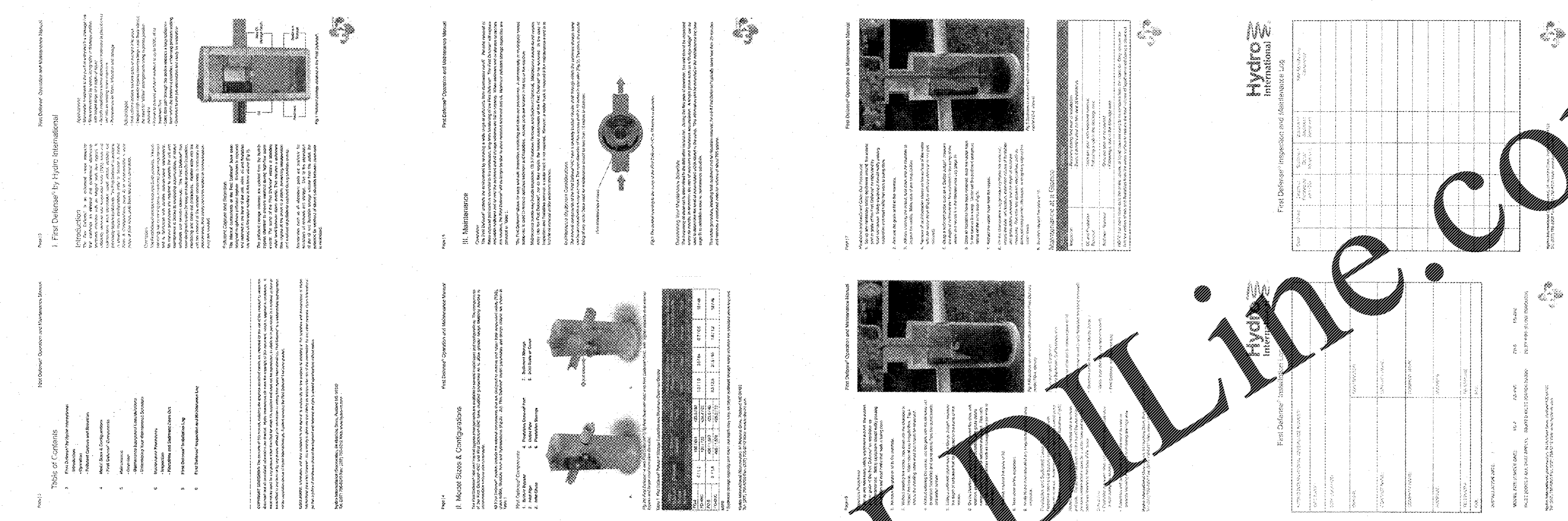

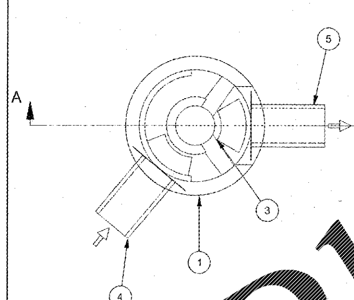

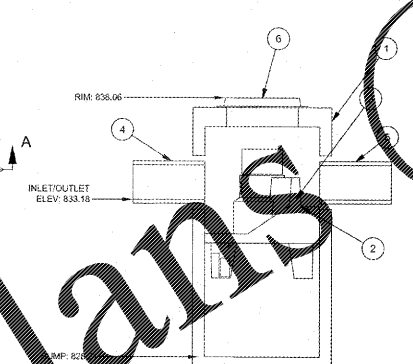

SECTION A-A

Parts List		
ITEM	SIZE (in)	DESCRIPTION
1	48	I.D. PRECAST MANHOLE
2		LEDGER SUPPORT
3		SEPARATION MODULE
4	18"	INLET PIPE (RCP)
5	18"	OUTLET PIPE (RCP)
6	30"	RING AND COVER

© 2014 Hydro International

Any warranty made by Hydro International only applies to those items supplied by it. Hydro International does not accept and expressly disclaims any responsibility or liability for any structure, plant or equipment (or the performance thereof) designed, built, manufactured or supplied by any third-party. Hydro International has a policy of continuous product development and reserves the right to amend the specifications of any of its products or equipment at any time. Hydro International expressly disclaims any liability for the performance of its equipment (or any part thereof) used or made subject to conditions outside of the conditions set forth in Hydro International's design specifications. Hydro International owns the copyright in and to this drawing, which is supplied in confidence, and all intended recipients of the drawing, by their use thereof, agree to hold the drawing in confidence and not to use it for any purpose other than for which it was supplied and not reproduce, in whole or in part, the drawing or any of the equipment or structures depicted therein, without prior written permission of Hydro International.

Notes

1. MANHOLE WALL AND SLAB THICKNESSES ARE NOT TO SCALE.
2. CONTACT HYDRO INTERNATIONAL FOR A BOTTOM OF STRUCTURE ELEVATION PRIOR TO SETTING FIRST DEFENSE MANHOLE.
3. CONTRACTOR TO CONFIRM RIM, PIPE INVERTS, PIPE DIA. AND PIPE ORIENTATION PRIOR TO RELEASE OF UNIT TO FABRICATION.

REV	BY	DATE	DESCRIPTION
	RC	1/15/15	FIRST ISSUE

REVISION HISTORY

Date 5-31-18 | Scale 1/4" = 1'0"

Drawn TAA | Checked | Approved

Title

4-FT DIAMETER HIGH CAPACITY FIRST DEFENSE

STR A3

RACETRAC
CARTERSVILLE, GA

Hydro International

Stormwater Solutions
94 Hutchins Drive
Portland, Maine 04102
Tel: (207) 756-6200
Fax: (207) 756-6212
stormwaterinquiry@hydro-int.com

CAD Ref: F4HC-MAX
Project No. xx-xxxx
Drawing No. F4HCS1 Rev.

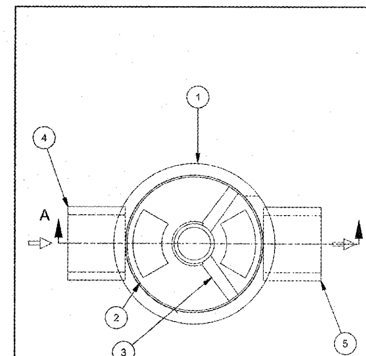

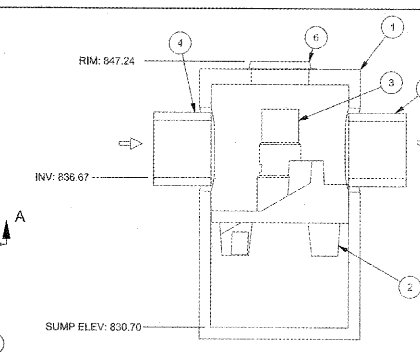

SECTION A-A

Parts List		
ITEM	SIZE (in)	DESCRIPTION
1	72	I.D. PRECAST MANHOLE
2		LEDGER SUPPORT
3		SEPARATION MODULE
4	18"	INLET PIPE (RCP)
5	18"	OUTLET PIPE (RCP)
6	30"	RING/COVER BY HYDRO-INTERNATIONAL

© 2008 Hydro International

Any warranty made by Hydro International only applies to those items supplied by it. Hydro International does not accept and expressly disclaims any responsibility or liability for any structure, plant or equipment (or the performance thereof) designed, built, manufactured or supplied by any third-party. Hydro International has a policy of continuous product development and reserves the right to amend the specifications of any of its products or equipment at any time. Hydro International expressly disclaims any liability for the performance of its equipment (or any part thereof) used or made subject to conditions outside of the conditions set forth in Hydro International's design specifications. Hydro International owns the copyright in and to this drawing, which is supplied in confidence, and all intended recipients of the drawing, by their use thereof, agree to hold the drawing in confidence and not to use it for any purpose other than for which it was supplied and not reproduce, in whole or in part, the drawing or any of the equipment or structures depicted therein, without prior written permission of Hydro International.

Notes

1. MANHOLE WALL AND SLAB THICKNESSES ARE NOT TO SCALE.
2. CONTACT HYDRO INTERNATIONAL FOR A BOTTOM OF STRUCTURE ELEVATION PRIOR TO SETTING FIRST DEFENSE MANHOLE.
3. CONTRACTOR TO CONFIRM RIM, PIPE INVERTS, PIPE DIA. AND PIPE ORIENTATION PRIOR TO RELEASE OF UNIT TO FABRICATION.

REV	BY	DATE	DESCRIPTION
	RC	1/15/15	FIRST ISSUE

REVISION HISTORY

Date 6-28-18 | Scale 1/4" = 1'0"

Drawn TAA | Checked | Approved

Title

6-FT DIAMETER FIRST DEFENSE HC

STR O3

RACETRAC
CARTERSVILLE, GA

Hydro International

Stormwater Solutions
94 Hutchins Drive
Portland, Maine 04102
Tel: (207) 756-6200
Fax: (207) 756-6212
stormwaterinquiry@hydro-int.com

CAD Ref: F6HC-MAX
Project No. xx-xxxx
Drawing No. F6HCS1 Rev.

NO.	REVISIONS	BY	DATE
3	CITY COMMENTS	TAA	9/05/18
2	CITY COMMENTS	TAA	8/08/18
1	CITY COMMENTS	TAA	5/31/18

PREPARED IN THE OFFICE OF:
LECRAW ENGINEERING
© 2018 LeCRAW ENGINEERING, INC.
3475 CORPORATE WAY - SUITE A
DULUTH, GEORGIA 30096
PHONE - 678.546.8100 FAX - 770.441.0298
WWW.LECRAWENGINEERING.COM
PEF005768

FOR INFORMATIONAL PURPOSES ONLY

THESE PLANS ARE SUBJECT TO FEDERAL COPYRIGHT LAWS: ANY USE OF SAME WITHOUT THE EXPRESSED WRITTEN PERMISSION OF RACETRAC PETROLEUM, INC. IS PROHIBITED.

RaceTrac
RACETRAC PETROLEUM, INC.
200 GALLERIA PKWY, SUITE 900
ATLANTA, GA 30339
(770) 431-7600

CONSTRUCTION DETAILS - 6

RACETRAC MARKET

SITE	1328 E. MAIN STREET CARTERSVILLE, BARTOW COUNTY, GEORGIA LAND LOT 390, 4TH DISTRICT, 3RD SECTION, PARCEL C096-0390-001
SCALE	1" = 30'
DATE	03/28/2018
DRAWN	MAT
JOB NO.	005031

CD-6

SHEET NO. | REV.

Order Plans @ WWW.LDILine.com