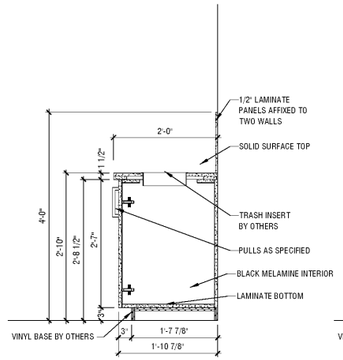

5 SECTION - BUSSING STATION
3/4" = 1'-0"

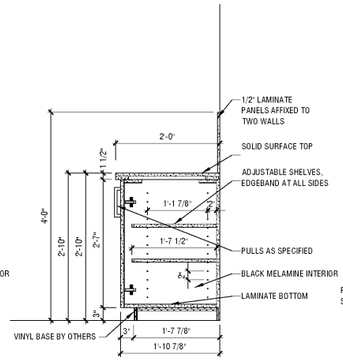

6 SECTION - BUSSING STATION
3/4" = 1'-0"

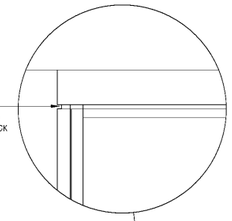

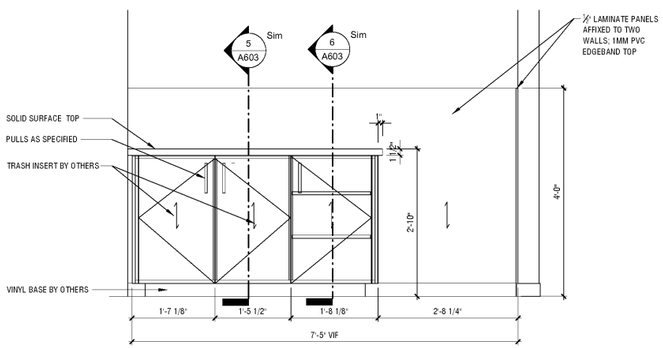

4 ELEVATION - BUSSING STATION
3/4" = 1'-0"

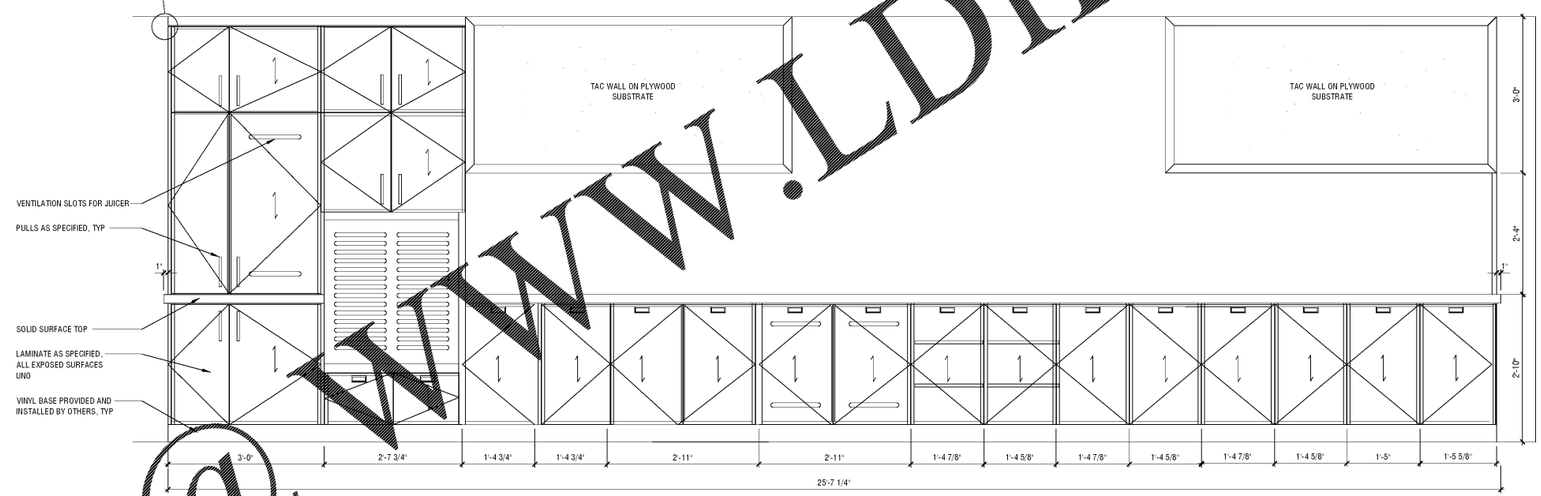

3 A4.71_7E-ELEVATION (SERVICE SIDE)
3/4" = 1'-0"

(SERVICE SIDE)

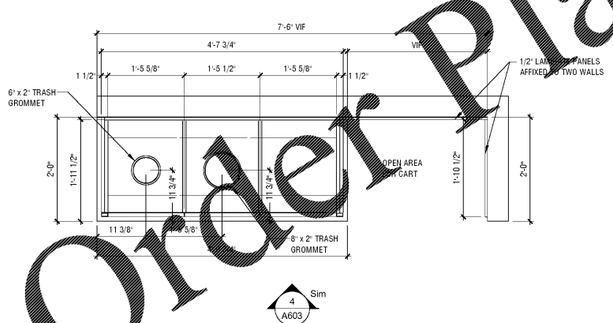

2 PLAN - BUSSING STATION
3/4" = 1'-0"

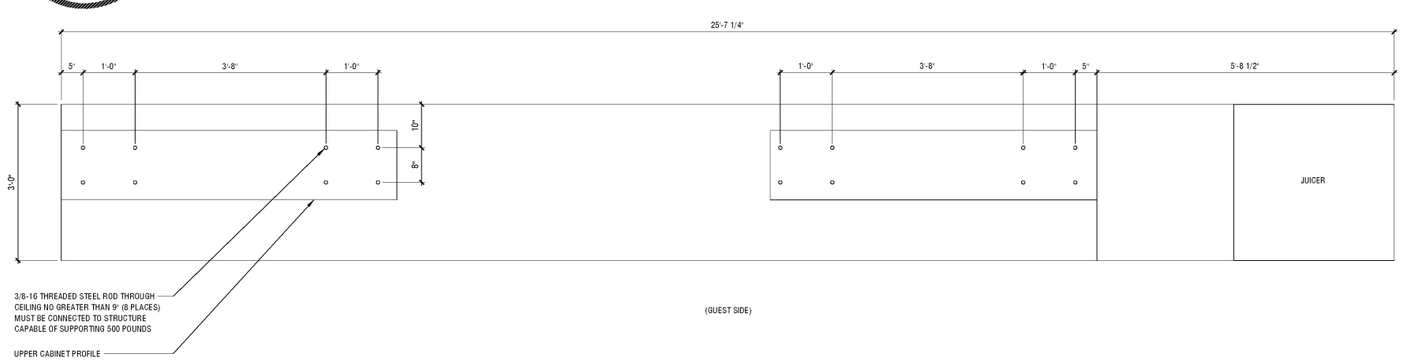

(GUEST SIDE)

1 UPPERS PLAN - BREAKFAST SERVING COUNTER
3/4" = 1'-0"

MISHRA ARCHITECTURE PLLC
6800 Phillip Creek Rd, Charlotte, NC 28277
Ph:(704) 625-6548 Fax:(704) 919-5822
Email: mishra@mishraarch.com
WEB: www.mishraarch.com

CIVIL:
Choctaw Engineering, Inc.
112 Truxton Avenue
Fort Walton Beach, FL 32547
Phone: (850) 862-6211
Fax: (850) 863-8059
Email: msiner@choctaweng.com

STRUCTURAL:
Whisonant Engineering Services, LLC
122 Nut Tree Court
Lexington, SC 29074
Phone: (803) 957-4008
Email: bill@weslex.com

MEP:
Allied Consulting Engineers
2905-D Queen City Drive
Charlotte, NC 28208
Phone: (704) 399-3943
Email: dbelk@allied-engineers.com

REVISIONS

No.	Date	Description

Information contained on this drawing and in all digital files associated is authorized for use on the project named herein only and is the property of MISHRA ARCHITECTURE PLLC and may not be reproduced in any manner without express written or verbal permission from authorized individuals. Original drawing is 24"x36" and scales are as indicated.© 2008 MISHRA ARCHITECTURE PLLC

STATE OF FLORIDA
NISH MISHRA
94089
REGISTERED ARCHITECT

VTM Hotels, LLC

Home2Suites

2630 Wilde Lake Blvd.
Pensacola, FL 32526

Drawing Title
Interior Elevations and Details

Phase
Construction Documents

Project No.	17-101
Prepared by	Author
Checked by	Checker
Date	Aug 06,2018

Sheet No.
A603

Review

Home2Suites

8/8/2018 10:32:39 PM

Order Plans @ WWW.LDILine.com