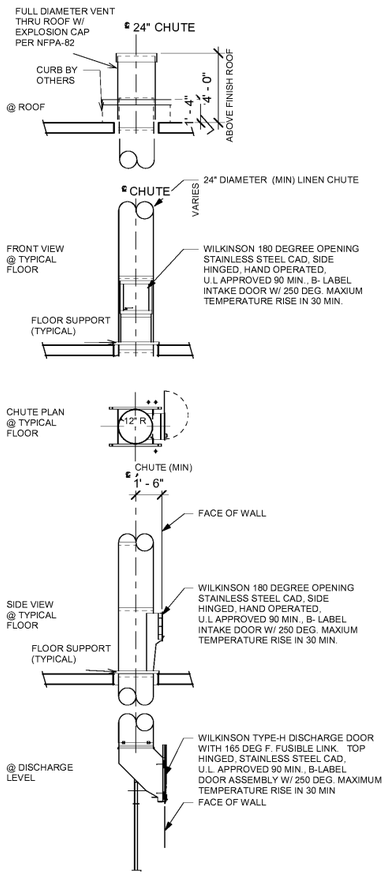

1 Laundry Chute Detail
1/4" = 1'-0"

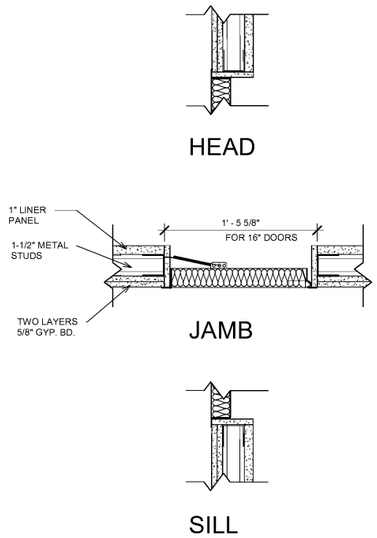

2 Laundry Chute Door
1 1/2" = 1'-0"

LADDER KEY NOTES

1. LADDER STRINGERS. 3"X3/8" STL. BARS. WELD FABRICATE, GRIND SMOOTH. ROUND ENDS SMOOTH.
2. LADDER RUNGS. 3/4" DIA. STL. BARS @ MAX. 12" O.C. WELD ALL ROUND TO STRINGERS, GRIND SMOOTH.
3. LADDER BRACKETS, 3"x3/8" x 11" LONG STL. ANGLE. ROUND ENDS SMOOTH. 5/8" DIA. MASONRY ANCHOR INTO EXTERIOR WALL. WELD ALL ROUND TO STRINGERS EVENLY SPACED AND 4'-0" MAX.

LADDER NOTES :

1. LADDER FINISH, GLAVANIZED.
2. 3/16" WELD ALL ROUND FABRICATE LADDER, GRIND SMOOTH PRIOR TO FINISH APPLICATION.
3. FIELD VEIFY EXACT LOCATION, COORDINATE WITH ELEVATOR SUPPLIER.

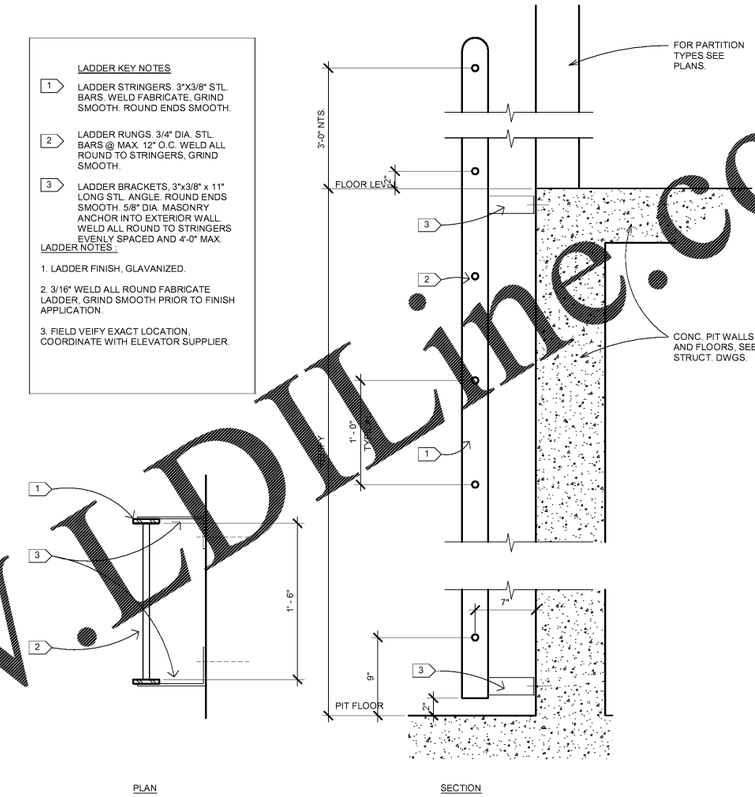

3 Elevator Pit Ladder
1 1/2" = 1'-0"

MISHRA ARCHITECTURE PLLC
6800 South Creek Rd, Charlotte, NC 28277
Ph:(704) 625-6594 Fax:(704) 919-5822
Email: mshish@mishraarch.com
WEB: www.mishraarch.com

CIVIL:
Choctaw Engineering, Inc.
112 Truxton Avenue
Fort Walton Beach, FL 32547
Phone: (850) 862-6211
Fax: (850) 863-8059
Email: msiner@choctaweng.com

STRUCTURAL:
Whisonant Engineering Services, LLC
122 Nut Tree Court
Lexington, SC 29074
Phone: (803) 957-4008
Email: bill@weslex.com

MEP:
Allied Consulting Engineers
2905-D Queen City Drive
Charlotte, NC 28208
Phone: (704) 399-3943
Email: dbelk@allied-engineers.com

REVISIONS

No.	Date	Description

Information contained on this drawing and in all digital files associated is authorized for use on the project named herein only and is the property of MISHRA ARCHITECTURE PLLC and may not be reproduced in any manner without express written or verbal permission from authorized individuals. Original drawing is 24"x36" and scales are as indicated.© 2008 MISHRA ARCHITECTURE PLLC

KEY PLAN

VTM Hotels, LLC

Home2Suites

2630 Wilde Lake Blvd.
Pensacola, FL 32526

Drawing Title
Section and Details

Phase
Construction Documents

Project No.	17-101
Prepared by	Author
Checked by	Checker
Date	Aug 06,2018

Sheet No.
A406

Home2Suites

Review

8/8/2018 10:30:55 PM

Order Plans @ www.LDILine.com