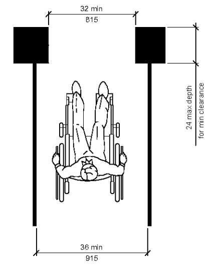

Fig. 1
Minimum Clear Width
for Single Wheelchair

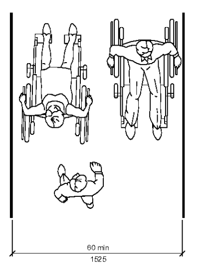

Fig. 2
Minimum Clear Width
for Two Wheelchairs

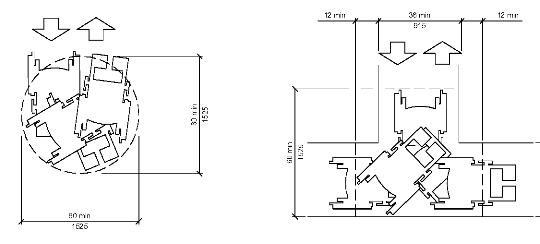

(a)
60-in(1525-mm)-Diameter Space

(b)
T-Shaped Space for 180° Turns

Fig. 3
Wheelchair Turning Space

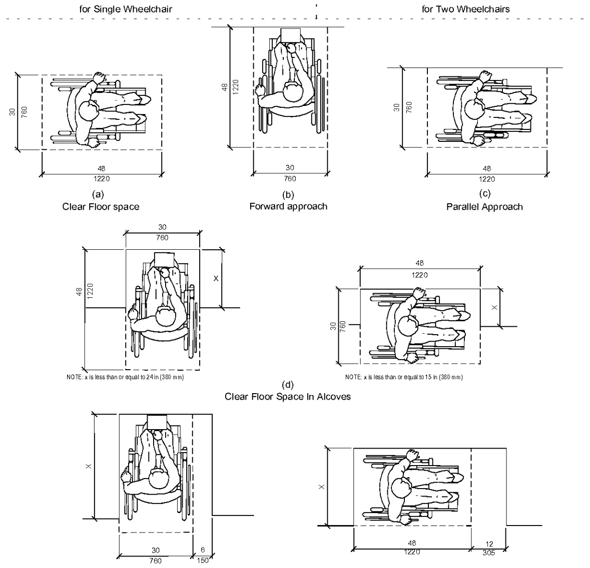

(a)
Clear Floor space

(b)
Forward approach

(c)
Parallel Approach

NOTE: x is less than or equal to 24 in (380 mm)

NOTE: x is less than or equal to 15 in (380 mm)

(d)
Clear Floor Space In Alcoves

NOTE: if x is greater than 24 in(610 mm), then an additional maneuvering clearence of 6 in (150 mm)shall be provided as shown.

NOTE: if x is greater than 15 in(380 mm), then an additional maneuvering clearance of 12 in (305 mm)shall be provided as shown.

(e)
Additional Maneuvering Clearance for Alcoves

Fig. 4
Minimum Clear Floor Space for Wheelchairs

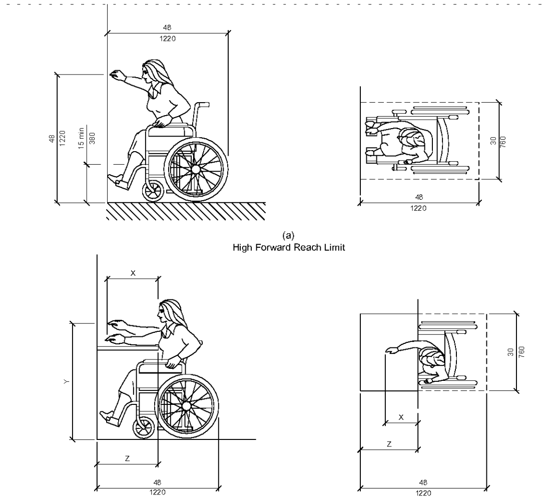

(a)
High Forward Reach Limit

NOTE: x shall be less than or equal to 25 in(635 mm); z shall be greater than or equal to x. When x is less than 20in (510 mm), then y shall be 48 in(1220 mm) maximum. When x is 20 to 25in(510 to 635mm), then y shall be 44 in (1120 mm) maximum.

(b)
Maximum forward Reach over an obstruction

Fig. 5
Forward Reach

MANEUVERING SPACE & REACH REQUIREMENTS

4.10. Elevators.

4.10.1 General. Accessible elevators shall be on an accessible route and shall comply with 4.10 and with ASME A 17.1.1990. Safety Code for Elevators and escalators. Freight elevators shall not be considered as meeting the requirements of this section unless the only elevators provided are used as combination passenger and freight elevators for the public and employees.

4.10.2 Automatic Operation. Elevator operation shall be automatic. Each car shall be equipped with a self-levelling feature that will automatically bring the car to floor landings within a tolerance of 1/2 in (13 mm) under rated loading to zero loading conditions. This self-leveling feature shall be automatic and independent of the operating device and shall correct the overtravel or undertravel.

4.10.3 Hall Call Buttons. Call buttons in elevator lobbies and halls shall be centered at 42 in (1065 mm) above the floor. Such call buttons shall have visual signals to indicate when each call is registered and when each call is answered. Call buttons shall be a minimum of 3/4 in (19 mm) in the smallest dimension. The button designating the up direction shall be on top. (see fig. 20) Buttons shall be raised or flush. Objects mounted beneath hall call buttons shall not project into the elevator lobby more than 4 in (100 mm).

4.10.4 Hall Lanterns. A visible and audible signal shall sound once for the top direction and twice for the down direction or shall have verbal announcers say up or down. Visible signs shall have the following features.

(1) Hall lantern fixtures shall be mounted so that their centerline is at least 72 in (1830 mm) above the lobby floor (see fig 20).

(2) Visual elements shall be at least 2 1/2 in (54 mm) in the smallest dimension.

(3) Signals shall be visible from the vicinity of the hall call button (see fig. 20). In-car lanterns located in cars, visible from the vicinity of hall call buttons, and conforming to the above requirements, shall be acceptable.

4.10.5 Raised and Braille Characters on Hoistway Entrances. All elevator hoistway entrances shall have raised and Braille floor designations provided on both jambs. The centerline of the characters shall be 60" (1525 mm) above finish floor. Such Characters shall be 2" (50 mm) high and shall comply with 4.30.4. Permanently applied plates are acceptable if they are permanently fixed to the jambs. (see fig. 20).

4.10.6 Door Protective And Reopening Device. Elevator doors shall open and close automatically. They shall be provided with a reopening device that will stop and reopen a car door and hoistway door automatically if the door becomes obstructed by an object or person. The device shall be capable of completing these operations without requiring contact for an obstruction passing through the opening at heights of 5 in and 29 in (125 mm and 735 mm) above finish floor (see fig. 20). Door reopening devices shall remain effective for at least 20 seconds. After such an interval, doors may close in accordance with the requirements of ASME A17.1-1990.

4.10.7" Door and Signal Timing for Hall Calls. The minimum acceptable time from notification that a car is answering until the doors of that car start to close shall be calculated from the following equation:

T = D/(1.5 ft/s) or T = D/(445 mm/s)

where T = total time in seconds and D = Distance (in feet or mm) from a point in the lobby or corridor 60" (1525 mm) directly in front of the farthest call button controlling that car to the centerline o fits hoistway door (see fig. 21). For cars with in-car lanterns, T begins when the lantern is visible from the vicinity of hall call buttons and an audible signal is sounded. The minimum acceptable notification time shall be 5 seconds.

4.10.8 Door Delay for Car Calls. The minimum time for elevator doors to remain fully open in response to a car call shall be 3 seconds.

4.10.9 Floor Plan of Elevator Cars. The floor area of elevator cars shall provide space for wheelchair users to enter the car, maneuver with in reach of controls, and exit from the car. Acceptable door opening and inside dimensions shall be as shown in Fig 22. The clearance between the car platform sill and the edge of any hoistway landing shall be no greater than 1 1/4"(32mm).

4.10.10 Floor Surfaces. Floor surfaces comply with 4.5.

4.10.11 Illumination Levels. The level of illumination at the car controls, platform, and car threshold and landing sill shall be at least 5 footcandles (53.8 lux.)

4.10.12" Car Controls. Elevator control panels shall have the following features:

(1) Buttons. All control buttons shall be at least 3/4"(19mm) in their smallest dimension. They shall be raised or flush.

(2) Tactile, Braille, and visual control Indicators. All control buttons shall be designated by Braille and by raised standard alphabet characters for letters, Arabic characters for numerals, or standard symbols as shown in fig.23 (a), and as required in ASME A 17.1-1990. Raised and Braille characters and symbols shall comply with 4.30. The call button for the main entry floor shall be designated by a raised star at the left of the floor designation (see Fig.23 (a)). All raised designations for control buttons shall be placed immediately to the left of the button to which they apply. Applied plates, permanently attached, are an acceptable means to provide raised control designations. Floor buttons shall be provided with visual indicators to show when each call is registered. The visual indicators shall be extinguished when each call is answered.

(3) Height. All floor buttons shall be no higher than 54" (1370mm) above the finish floor for side approach and 48" (1220mm) for front approach. Emergency controls, including the emergency alarm and emergency stop, shall be grouped at the bottom of the panel and shall have their centerlines no less than 35"(890mm) above the finish floor (see fig.23 (a) and (b)).

(4) Location. Controls shall be located on a front wall if cars have center opening doors, and at the side wall or at the front wall next to the door if cars have side opening doors (see fig.23 (c) and (d)).

4.10.13" Car Position Indicators. In elevator cars, a visual car position indicator shall be provided above the car control panel or over the door to show the position of the elevator in the hoistway. As the car passes or stops at a floor served by the elevators the corresponding numerals shall illuminate, and an audible signal shall sound. Numerals shall be a minimum of 1/2"(13mm) high. The audible signal shall be no less than 20 decibels with a frequency no higher than 1500 Hz. An automatic verbal announcement of the floor number at which a car stops or which a car passes may be substituted for the audible signal.

4.10.14" Emergency Communications. If provided, emergency two-way communication systems between the elevator and a point outside the hoistway shall comply with ASME A 17.1-1990. The highest operable part of a two-way communication system shall be a maximum of 48"(1220mm) from the floor of the car. It shall be identified by a raised symbol and lettering complying with 4.30 and located adjacent to the device. If the uses a handset then the length of the cord from the panel to the handset shall be at least 29"(735mm). If the system is located in a closed compartment, the compartment door hardware shall conform to 4.27, Controls and Operating Mechanisms. The emergency intercommunication system shall not require voice communication.

NOTE: The automatic door reopening device is activated if an object passes through either line A or line B. Line A and line B represent the vertical locations of the door reopening device not requiring contact.

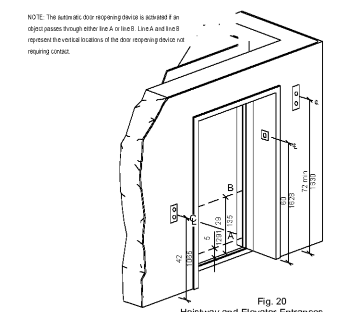

Fig. 20
Hoistway and Elevator Entrances

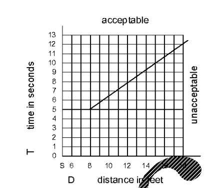

Fig. 21
Graph of Timing Equation

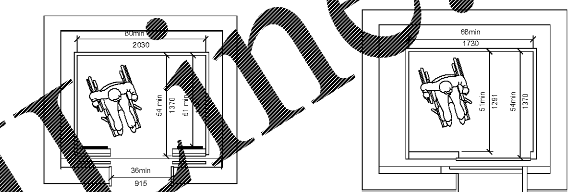

Fig. 22
Minimum Dimensions of Elevator Cars

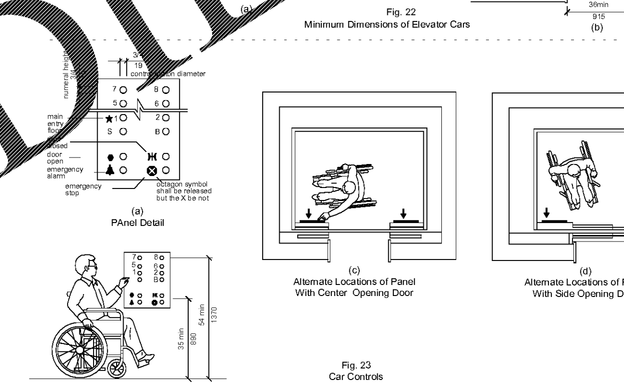

(a)
PAnel Detail

(b)
Car Control Height

(c)
Alternate Locations of Panel
With Center Opening Door

(d)
Alternate Locations of Panel
With Side Opening Door

Fig. 23
Car Controls

ELEVATORS

4.2 Space allowance and Reach Ranges.

4.2.1" Wheelchair Passage Width. The minimum clear width for single wheelchair (815mm) and 36 in.(915 mm) continuously (see fig. 1 and 24 (e)).

4.2.2 Width for Wheelchair Passing. The minimum width for two wheelchairs to pass is 60 in. (1525 mm) (see fig. 2).

4.2.3" Wheelchair turning space. The space required for a wheelchair to make a 180 degree turn is a clear space of 60 in.(1525 mm) diameter (see fig.3 (a)) or a T-shaped space (see fig. 3 (b)).

4.2.4" Clear floor or Ground Space for Wheelchairs.

4.2.4.1 Size and Approach. The minimum clear floor or ground space required to accommodate a single, stationary wheelchair and occupant is 30 in. by 48 in.(760mm by 1220 mm)(see fig.4 (a)). The minimum clear floor or ground space for wheelchairs may be positioned for forward or parallel approach to an object. (see fig.4 (b) and (c)). Clear floor or ground space for wheelchairs may be part of the knee space required under some objects.

4.2.4.2 Relationship of Maneuvering Clearance to Wheelchair Spaces. One full unobstructed side of the clear floor or ground space for a wheelchair shall adjoin or overlap an accessible route or adjoin another wheelchair clear floor space. If a clear floor space is located in an alcove or otherwise confined on all or part of three sides, additional maneuvering clearances shall be provided as shown in fig. 4 (d) and (e).

4.2.4.3. Surfaces for Wheelchair Spaces. Clear floor or ground spaces for wheelchairs shall comply with 4.5.

4.2.5" Forward Reach. If the clear floor space only allows forward approach to an object, the maximum high forward reach allowed shall be 48 in.(1220 mm) see fig.5 (a). The minimum low forward reach is 15 in.(380 mm). If the high forward reach is over an obstruction, reach and clearances shall be as shown in fig. 5(b).

4.2.6" Side Reach. If the clear floor space allows parallel approach by a person in a wheelchair, the maximum high side reach allowed shall be 54 in 91370mm) and the low side reach shall be no less than 9 in.(230 mm) above the floor (fig.6 (a) and (b)). If the side reach is over an obstruction, the reach and clearances shall be as shown in fig.6 (c).

4.3 Accessible Route.

4.3.1" General. All walks, halls, corridors, aisles, skywalks, tunnels, and other spaces that are part of an accessible route shall comply with 4.3.

4.3.2 Location.

(1) At least one accessible route within the boundary of the site shall be provided from public transportation shops, accessible parking, and accessible passenger loading zones, and public streets or sidewalks to the accessible building entrance they serve. The accessible route shall, to the maximum extent feasible coincide with the route for the general public.

(2) At least one accessible shall connect accessible buildings, facilities, elements, and spaces that are on the same Site.

(3) At least one accessible route shall connect accessible building or facility entrances with all accessible spaces and elements and with all accessible dwelling units within the building or facility.

(4) An accessible route shall connect at least one accessible entrance of each accessible dwelling unit with those exterior and interior spaces and facilities that serve the accessible dwelling unit.

4.3.3 Width. The minimum clear width of an accessible route shall be 36 in.(915 mm) except at doors (see 4.13.5 and 4.13.6). Obstruction, the minimum clear width of the accessible route shall be as shown in fig.7 (a) and (b).

4.3.4 Passing Space. If an accessible route has less than 60 in. 91525mm) clear width, then passing spaces at least 60 in. by 60 in.(1525mm by 1525mm) shall be located at reasonable intervals not to exceed 200 ft. (61 m), A T-intersection of two corridors or walks is an acceptable passing place.

4.3.5 Head Room. Accessible routes shall comply with 4.4.2.

4.3.6 Surface Textures. The surface of an accessible route shall comply with 4.5.

4.3.7 Slope. An accessible route with running slope greater than 1:20 is a ramp and shall comply with 4.8. Nowhere shall the cross slope of an accessible route exceed 1:50.

4.3.8 Changes in Levels. Changes in levels along an accessible route shall comply with 4.5.2. If an accessible route has changes in level greater than 1/2"(13mm), then a curb ramp, ramp, elevator, or platform lift (as permitted in 4.1.3 and 4.1.6) shall be provided that complies with 4.7, 4.8, 4.10, or 4.11, respectively. An accessible route does not include stairs, steps, or escalators. See definition of "egress, means of" in 3.5.

4.3.9 Doors. Doors along an accessible route shall comply with 4.13.

4.3.10 Egress. Accessible routes serving any accessible space or element shall also serve as a means of egress for emergencies or connect to an accessible area of rescue assistance.

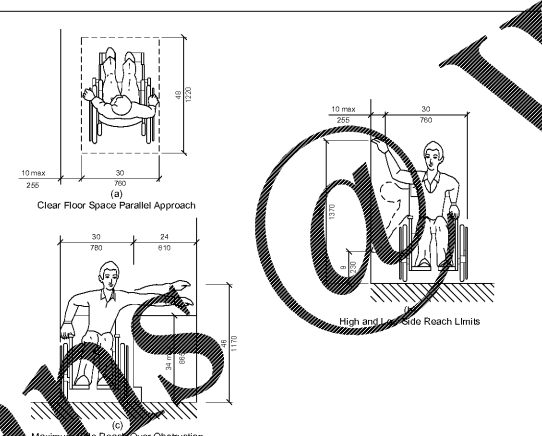

(a)
Clear Floor Space Parallel Approach

(b)
High and Low Side Reach LImits

(c)
Maximum Side Reach Over Obstruction

Fig. 6

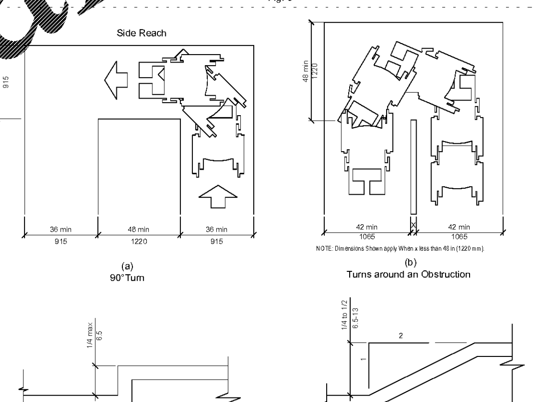

(a)
90°Turn

NOTE: Dimensions Shown apply When x less than 48 in (1220 mm).

(b)
Turns around an Obstruction

(c)
Changes in Level

(d)
changes in level

Fig. 7
Accessible Route

SPACE ALLOWANCES & REACH RANGES

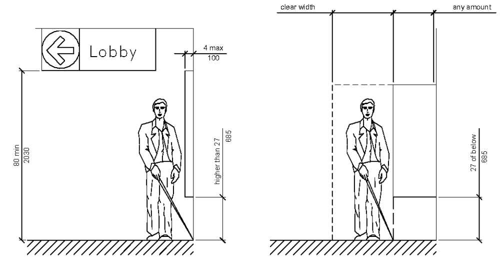

Fig. 8 (a)
Walking Perpendicular to a wall

Fig. 8(b)
Walking Perpendicular to a Wall

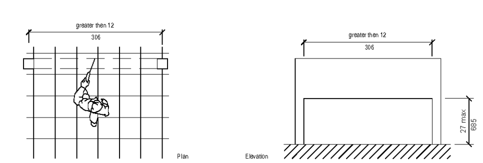

Fig. 8 (c) Free-Standing Overhanging Objects

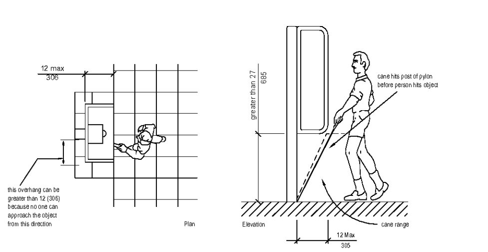

Fig. 8 (d)
Objects Mounted On Posts or Pylons

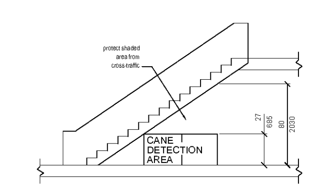

Fig. 8 (c-1) Overhead Hazards

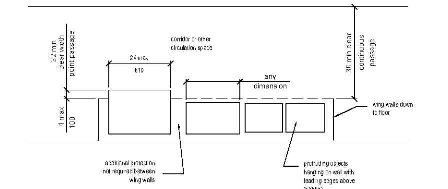

Fig. 8 (e)
Example of Protection around Wall-Mounted Objects and Measurements of Clear Widths

PROTRUDING OBJECTS

MISHRA
ARCHITECTURE PLLC
6800 South Creek Rd. Charlotte, NC 28277
Ph:(704) 625-6554 Fax:(704) 919-5822
EMail: ashish@mishraarch.com
WEB: www.mishraarch.com

CIVIL:
Choctaw Engineering, Inc.
112 Truxton Avenue
Fort Walton Beach, FL 32547
Phone: (850) 862-6211
Fax: (850) 863-8059
Email: msiner@choctaweng.com

STRUCTURAL:
Whisonant Engineering Services, LLC
122 Nut Tree Court
Lexington, SC 29074
Phone: (803) 957-4008
Email: bill@weslex.com

MEP:
Allied Consulting Engineers
2905-D Queen City Drive
Charlotte, NC 28208
Phone: (704) 399-3943
Email: dbelk@allied-engineers.com

REVISIONS		
No.	Date	Description

Information contained on this drawing and in all digital files associated is authorized for use on the project named herein only and is the property of MISHRA ARCHITECTURE PLLC and may not be reproduced in any manner without express written or verbal permission from authorized individuals. Original drawing is 24"x36" and scales are as indicated.© 2008 MISHRA ARCHITECTURE PLLC

KEY PLAN

VTM Hotels, LLC

Home2Suites

2630 Wilde Lake Blvd.
Pensacola, FL 32526

Drawing Title
ADA and Code

Phase
Construction Documents

Project No.	17-101
Prepared by	Author
Checked by	Checker
Date	Aug 06,2018

Sheet No.
T004

Home2Suites

Review

8/8/2018 10:34:36 PM

Order Plans @ www.LDIline.com