Enclosed Safety Switches
General Duty Safety Switches

Table 9: Fusible Safety Switch Short Circuit Current Rating

Fuse Class	UL Listed Short Circuit Rating
Plug	10 kA
H, K	10 kA
J [1], R	100 kA
T [2]	100 kA

1 Only applicable to 200–600 A except D325NT, D325NTR, D326NT and D326NTR.
2 Only applicable to D325NT, D325NTR, D326NT, D326NTR, T327N and T327NR.

Table 10: Non-Fusible Safety Switch Short Circuit Current Rating

Fuse Class or Circuit Breaker Type [1]	UL Listed Short Circuit Rating
Any Brand Circuit Breaker	10 kA
H or J PowerPact Circuit Breaker	Up to 65 kA [2]
H, K	10 kA
J, R	100 kA [3]
T	100 kA [4]

1 Ampere rating of fuse or circuit breaker not to exceed switch ampere ratings.
2 Only applicable to DU324 and DU324NRB. HD, JD = 25 kA maximum.
3 SCCR = 50 kA, applicable to DU222RB, DU322 and DU322RB.
4 Only applicable to DU323, DU323RB, DU325 and DU326.

Standards

General duty safety switches are manufactured in accordance with these standards:

- UL 98, Standard for Enclosed and Dead Front Switches. UL Listed File E2875
- NEMA Standards Publication KS1, Enclosed Switches
- Federal Specifications WS-865c for Type NDS (Type 1) and Type LD (Type 3R)

Table 11: Terminal Lug Data [1]

Ampere Rating	Conductors Per Phase	Wire Range Wire Bending Space Per NEC® Table 312.6 AWG/kcmil	Lug Wire Range AWG/kcmil
30 [2]	1	12–8 (Al) or 14–8 (Cu)	12–8 (Al) or 14–8 (Cu)
30		12–6 (Al) or 14–6 (Cu)	12–6 (Al) or 14–6 (Cu)
60	1	12–3 (Al) or 14–3 (Cu)	12–2 (Al) or 14–2 (Cu)
100	1	12–1 (Al) or 14–1 (Cu)	12–1/0 (Al) or 14–1/0 (Cu)
200	1	6–250 (Al/Cu)	6–300 (Al/Cu)
400 Type 1	1 or 2	1/0–600 (Al/Cu) or 1/0–300 (Al/Cu)	(1) 1/0–750 (Al/Cu) or (2) 1/0–300 (Al/Cu)
400 Type 3R	2	1/0–250 (Al/Cu)	(1) 1/0–600 (Al/Cu) or (2) 1/0–250 (Al/Cu)
600	2	4–500 (Al/Cu)	4–600 (Al/Cu)
800	3	3/0–500 (Al/Cu)	3/0–500 (Al/Cu)

1 30–100 A switches suitable for 60°C (140 °F) or 75°C (167 °F) conductors. 200–800 A switches suitable for 75°C (167 °F) conductors.
2 Light duty switches only.

Heavy Duty
Enclosed Safety Switches
General Information

Table 44: Terminal Lug Data [1]

Rating (A)	Wires Per Phase and Neutral	Wire Range Wire Bending Space Per NEC Table 312.6 AWG/kcmil	Lug Wire Range AWG/kcmil	Optional [2] Versa-Crimp™ Compression Lug Field-Installed	Optional Copper Only Versa-Crimp™ Compression Lug Field-Installed [2,3]
30	1	12–8 (Al) or 14–8 (Cu)	12–2 (Al) or 14–2 (Cu)	—	C10–14 [illegible] or E6–14
	2	12–10 (Al) or 14–10 (Cu)			
60 [5]	1	12–3 (Al) or 14–3 (Cu)	12–2 (Al) or 14–2 (Cu)	—	[illegible]–14 [4], D8–14 or [illegible]–14
100 [6]	1	12–1/0 (Al) or 14–1/0 (Cu)	12–1/0 (Al) or 14–1/0 (Cu)	VCEL02114S1	VCE[illegible]14S1
200 [7]	1	6–250 (Al/Cu)	6–300 (Al/Cu)	VCEL02[illegible]1	VCELC03[illegible]
400 [8]	1 or 2	1/0–750 (Al/Cu) or 1/0–300 (Al/Cu)	1/0–750 (Al/Cu) and 1/0–300 (Al/Cu)	[illegible]512H1 or VCEL[illegible]H1 [9] and VCEL05[illegible]	VCELC07512[illegible] or VCELC030516H1 [10] and VCELC06012H1
600	2	3/0–500 (Al/Cu)	3/0–50[illegible]Cu)	VCEL06012[illegible]	VCELC06012H1
800	3	3/0–750 (Al/Cu)	[illegible]–750 (Al/Cu)	[illegible]8LKE2 [11]	—
1200	4	3/0–750 (Al/Cu)	[illegible]750 (Al/[illegible])	[illegible]12LKE2 [12]	—

1 30–100 A switches suitable for 60°C (140 °F) or 75°C ([illegible]F) conductors. 200–120[illegible] switches suitable for 75°C (167 °F) conductors.
2 Hubbell Versa-Crimp™ unless otherwise noted.
3 For Type 1, 12/3[illegible] stainless [illegible] switches only.
4 Order C10-[illegible] and E[illegible] Thomas [illegible].
5 H60XFA [illegible] H60XFA1212 — use [illegible] (167 °F) [illegible] wire only. #8 AWG [illegible] wire required for 60 A rating.
6 H100XF[illegible] and H100XFA1212 — use [illegible] (167 °F) [illegible] wire only. #3 AWG copper wire required for 100 A rating.
7 H225X[illegible] and H225XJGAA — use 75 [illegible] °F) copp[illegible] only. Lug wire range is #3 AWG – 350 kcmil. Not UL Listed due to inadequate wire bending space (5 in. ([illegible]) on the ON end, 6 in. ([illegible]) on the OF[illegible].
8 Maxim[illegible] bending space allows for [illegible] kcmil or [illegible] 300 kcmil Al/Cu on Type 4/4X/5 stainless steel and Type 12 switches.
9 For Type [illegible]3R only. For Type 4/4X/5 st[illegible] steel and Type 12/3R, 12K use VCEL03038H1 (Al/Cu) or VCELC03038H1 (Cu only). Order two PK516KN mounting kits when [illegible] VCEL030516H1 lugs. O[illegible] kit is required on two-pole switches. PK561KN consists of four 5/16-18 (7 mm) Keps Nuts.
10 For Type 4/[illegible] stainless steel and Type [illegible]/3R, 12K use VCEL03038H1 (Al/Cu) or VCELC03038H1 (Cu only). Order two PK516KN mounting kits when installing VCEL03051[illegible] VCELC030516H1 [illegible]. Only one kit is required on two-pole switches. PK561KN consists of four 5/16-18 (7 mm) Keps Nuts.
11 For 800 and 1200 A [illegible] kits, see Table 37 on page 34 for additional information.

SQUARE D by Schneider Electric
schneider-electric.us

Modifications For Factory Assembled Panelboards

Modifications for Factory Assembled Panelboards

Class 1640, 1670, 2110, 4620, 6650 / Refer to 2110CT9701, 1640CT0701, 1640CT0801, 462[illegible]

Main Circuit Breaker Without Overload Trip
(Automatic Molded Case Switch)
- (Not UL Listed)

Shunt Trip Circuit Breakers
- NOTE: For molded case switch and automatic molded case switch short circuit current ratings, see Short Circuit Current Ratings (SCCR), page 7-41.

Special Features
For information on the following special features, please see the Supplemental and Obsolescence Digest.
- Powerlogic metering [1]
- Customer equipment space (NQ and NF) [1]
- Increased box depth [1]
- Increased gutters–top, bottom, and sides [1]
- Non-standard paint [1]
- Welded base channel [1]
- Type 1 gasketed [1]
- Type 2 drip hood [1]
- Type 3R/4/4X/5/12 stainless steel enclosure [1]
- Type 4X fiberglass enclosure [1]
- Stainless steel trim front [1]
- Padlockable hasp [1]
- Special locks (Corbin, Yale, Best) [1]
- Equal height boxes [1]
- Common trim to cover two equal height boxes [1]
- Panelboard skirt—hides conduits feeding a panelboard [1]
- Panelboard wireway—for terminating conduit in wireway endwall [1]
- Keyed mechanical interlocking of two or more circuit breakers (I-Line and QMB) [1]
- Motor operators (I-Line only)
- Panelboard interiors and special fronts to fit existing boxes
- A standard panelboard box has one blank endwall and one with knockouts. Blank endwalls or knockouts in both endwalls are also available [1]

PANELBOARDS 9

NQ and NF Terminal Data

Table 9.14[illegible]: NQ Standard Aluminum Mechanical Lugs—Main Lugs

Panel Type	Ampere Rating	Lug Wire Range
NQ	100 A	one #6-2/0 Al or Cu
	225 A	one #6-350 kcmil Al or Cu
	400 A	one 1/0-750 kcmil or two 1/0-350 kcmil Al or Cu
	800 A	two 1/0-750 kcmil Al or Cu

Table 9.146: NQ Standard Aluminum Mechanical Lugs—Main Circuit Breaker

Panel Type	Ampere Rating	Circuit Breaker Type	Lug Wire Range [1]
NQ	100 A	QOB	one #4-#2/0 Al or Cu
		FI	one #14-#1/0 Al or Cu
	150 A	HD, HG, HJ, HL	one #14-#3/0 Al or Cu
	225 A	QB, QD, QG, QJ	one #4-300 kcmil Al or Cu
	250 A	JD, JG, JJ, JL	one #3/0-350 kcmil Al or Cu [1]
		DJ	one #2-600 Cu or #2-500 Al
		KI	one #1/0-350 kcmil Al or Cu
	400 A	LA, LH	one #1-600 kcmil Al or Cu or two #1-250 kcmil Al or Cu
	600 A	LC	two #4/0-500 kcmil Al or Cu

Table 9.147: NF Standard Mechanical Lugs—Main Lugs

Panel Type	Ampere Rating	Lug Wire Range
NF	125 A	one #6-2/0 Al or Cu
	250 A	one #6-350 kcmil Al or Cu
	400 A	one #1/0-750 kcmil or two #1/0-350 kcmil Al or Cu
	600 A	two #1/0-600 kcmil Al or Cu
	800 A	three #4/0-500 kcmil Al or Cu

Table 9.148: NF Standard Mechanical Lugs—Main Circuit Breaker

Panel Type	Ampere Rating	Circuit Breaker Type	Lug Wire Range [1]
NF	125 A	ED, EG, EJ	one #14-#2/0 Al or Cu
	100 A	FI	one #14-#1/0 Cu or one #12-#1/0 Al
	150 A	HD, HG, HJ, HL	one #14-#3/0 Al or Cu
	250 A	JD, JG, JJ, JL	one #3/0-350 kcmil Al or Cu [1]
		DJ	one #2-600 Cu or #2-500 Al
		KI	one #1/0-350 kcmil Al or Cu
	400 A	LA, LH	one #1-600 kcmil or two #1-250 kcmil Al or Cu
	600 A	LC, LI, LE, LX, LXI	two #4/0-500 kcmil Al or Cu

[1] Supported by the Panelboard Product Selector.
[1] The lug range shown is for the highest amperage of the circuit breaker frame shown in the table.

© 2016 Schneider Electric
All Rights Reserved
3/24/2016

9-53

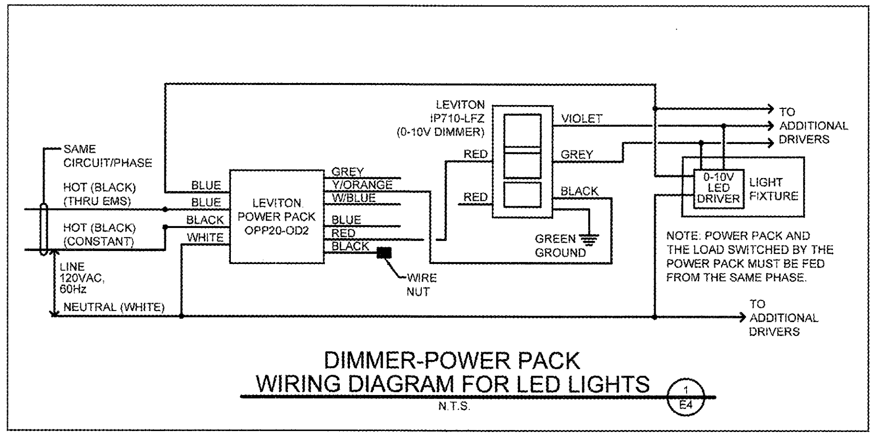

DIMMER-POWER PACK
WIRING DIAGRAM FOR LED LIGHTS (1/E4)
N.T.S.

GENERAL ELECTRIC NOTES

A. DRAWINGS ARE DIAGRAMMATIC & ARE NOT TO BE SCALED. SEE THE ARCHITECTURAL PLANS & FIELD VERIFY CONDITIONS FOR DIMENSIONS.
B. ALL ELECTRICAL WORK SHALL COMPLY WITH THE EDITION OF NFPA 70-NATIONAL ELECTRIC CODE (NEC) AS NOTED ON THE COVER SHEET.
C. ALL WIRING SHALL BE IN CONDUIT, EXCEPT THAT MC-CABLE MAY BE SUBSTITUTED ONLY AS FOLLOWS:
   a. MC-CABLE (MAXIMUM CABLE LENGTH OF 10'-0") MAY BE INSTALLED ONLY FOR BRANCH CIRCUIT WIRING TO LIGHT FIXTURES.
   b. MC-CABLE (MAXIMUM CABLE LENGTHS SHOWN ON DETAIL 2/E2) MAY BE INSTALLED ONLY ABOVE SLAB AND ONLY AT LOCATIONS INDICATED ON E2 SHEET.
D. FEEDER CONDUIT SHALL BE IMC OR RGS ABOVE GRADE & PVC BELOW GRADE WITH IMC OR RGS ELLS & RISERS. INTERIOR BRANCH CIRCUIT CONDUIT SHALL BE ELECTRICAL METALLIC TUBING. EXTERIOR BRANCH CIRCUIT CONDUIT SHALL BE PVC BELOW GRADE WITH IMC OR RIGID GALVANIZED STEEL CONDUIT CONTINUING ABOVE GRADE. (SPEC 26 05 33)
E. COORDINATE ALL WORK WITH OTHER TRADES TO AVOID CONFLICTS. COORDINATION DOES NOT MEAN "I WAS HERE FIRST."
F. ALL WIRING IN FINISHED SPACES SHALL BE CONCEALED, UNLESS NOTED OTHERWISE.
G. THE CONTRACTOR SHALL BE RESPONSIBLE FOR INSTALLING A COMPLETE & FUNCTIONAL SYSTEM IN ACCORDANCE WITH THE INTENT OF THE PLANS, WHETHER OR NOT EVERY ELEMENT THEREOF IS SPECIFICALLY CALLED OUT.
H. COORDINATE ALL EQUIPMENT ROUGH-IN CONNECTION REQUIREMENTS.
I. ALL OUTLET BOXES SHALL BE METALLIC. (SPEC 26 05 34)
J. ALL CAULKING ON BUILDING PENETRATIONS SHALL BE ELASTOMERIC POLYURETHANE (NO EXCEPTIONS), EQUAL TO "VULKEM" 116. ANY CONTRACTOR WHO USES SILICONE OR ANY OTHER CAULKING WILL BE REQUIRED TO REMOVE & REPLACE WITH ELASTOMERIC POLYURETHANE.
K. RECEPTACLES INSTALLED IN RESTROOMS SHALL BE GFCI TYPE OR SHALL BE PROTECTED BY A GFI DEVICE.
L. ALL DEVICES SHALL BE IVORY & SHALL BE EQUAL TO THE FOLLOWING:
   SINGLE POLE SWITCHES --
   THREE-WAY SWITCHES --
   DUPLEX RECEPTACLE -- (SPEC 26 27 26)
   GFCI DUPLEX RECEPTACLE --
   ISO. GRD. RECEPTACLES --
M. USE DEVICE PLATES MANUFACTURED BY THE DEVICE MANUFACTURER. (SPEC 26 27 26)
N. FEEDER & BRANCH CIRCUIT CONDUCTORS SHALL BE COPPER, STRANDED, 600V THHN/THWN INSULATION. EXCEPTION: WIRE SIZES #10 AWG & SMALLER SHALL BE SOLID. (SPEC 26 05 19)
O. CONTRACTOR SHALL PROVIDE A TYPED CIRCUIT DIRECTORY FOR ALL PANELS. (SPEC 26 05 53)
P. CONTRACTOR SHALL PROVIDE A ONE(1) YEAR WARRANTY ON ALL WORK PERFORMED.
Q. CONTRACTOR SHALL PROVIDE NEW WORKING LAMPS IN ALL LIGHT FIXTURES AT JOB COMPLETION.
R. CONTRACTOR SHALL COORDINATE WITH & SHALL INCLUDE ALL FEES FOR THE SERVING "ELECTRIC UTILITY CO." TO PROVIDE ELECTRIC SERVICE AS SHOWN. CONTRACTOR SHALL ALSO INCLUDE ALL FEES FOR THE "SERVING PHONE COMPANY" TO INSTALL NO LESS THAN 10 PAIR CABLE TO BUILDING.
S. CONTRACTOR SHALL ARRANGE FOR & INCLUDE ALL PERMITS & FEES FOR HIS SCOPE OF WORK.
T. CONTROL WIRING BY HVAC CONTRACTOR. FINAL CONNECTIONS BY HVAC CONTRACTOR. SEE SHEET M[illegible].
U. APPROVED MANUFACTURERS:
V. PANELBOARDS & SAFETY SWITCHES (DISCONNECTS): --'SQUARE D' --'G.E' --'SEIMENS' --'CUTLER-HAMMER' (SPEC 26 24 00)
   V1. DEVICES: -- 'HUBBELL' -- 'LEVITON' -- 'PASS & SEYMOUR' (SPEC 26 27 26)
   V2. FLOOR BOXES: -- 'STEEL CITY' -- 'APPLETON' -- 'HUBBELL' (SPEC 26 0[illegible]34)
W. MULTIWIRE BRANCH CIRCUITS WITH A "SHARED NEUTRAL" ARE NOT ALLOWED FOR SINGLE PHASE CIRCUITS.

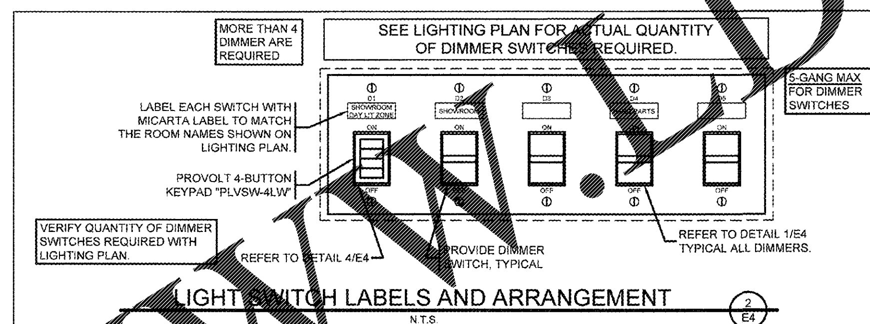

LIGHT SWITCH LABELS AND ARRANGEMENT (2/E4)
N.T.S.

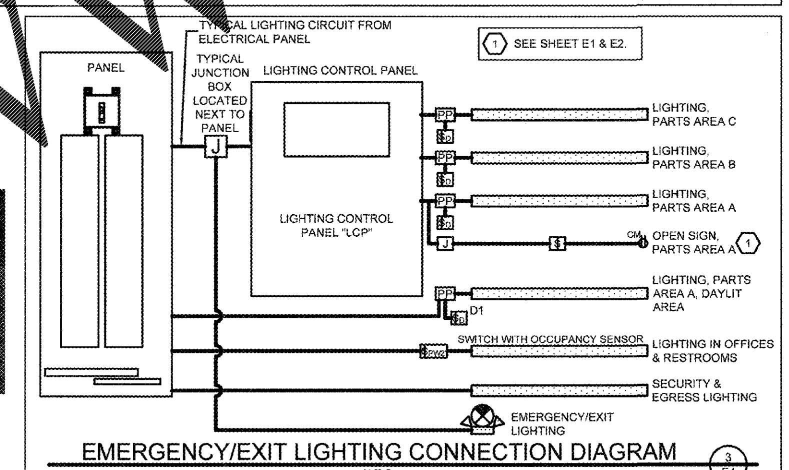

EMERGENCY/EXIT LIGHTING CONNECTION DIAGRAM (3/E4)
N.T.S.

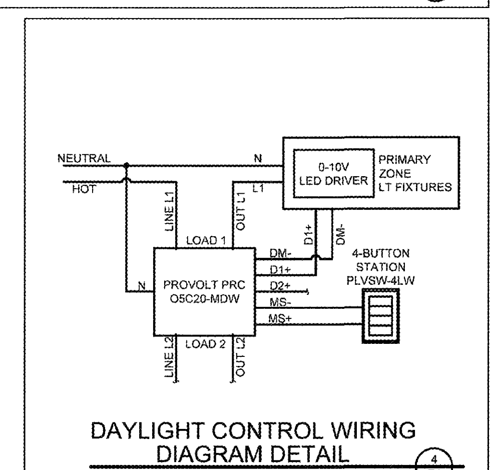

DAYLIGHT CONTROL WIRING DIAGRAM DETAIL (4/E4)
N.T.S.

ELECTRICAL SYMBOL LEGEND & ABBREVIATIONS

- SINGLE POLE SWITCH
- TWO POLE SWITCH
- THREE-WAY SWITCH
- MOTOR STARTING SWITCH WITH PILOT LIGHT
- CLASS 1, DIVISION 1 HAZARDOUS LOCATION RATED SWITCH ASSEMBLY
- WALL MOUNTED OCCUPANCY SENSOR EQUAL TO "LEVITON, ODS10-ID"
- WALL MOUNTED OCCUPANCY SENSOR EQUAL TO "LEVITON, OSSMD-MD"
- FAN SPEED SWITCH (SUPPLIED BY HVAC CONTRACTOR / INSTALLED BY ELECTRICAL CONTRACTOR)
- 0-10V LED DIMMER SWITCH, EQUAL TO "LEVITON, IP710-LFZ". SEE DETAILS THIS SHEET (5-GANG MAX)
- PP — LEVITON POWER PACK OPP20-OD2
- SINGLE RECEPTACLE
- DUPLEX RECEPTACLE
- ISOLATED GROUND DUPLEX RECEPTACLE (ORANGE IN COLOR). SEE DETAIL 1/E3
- QUADPLEX RECEPTACLE (TWO DUPLEX RECEPTACLES IN ONE 2-GANG BOX UNDER A SINGLE COVERPLATE)
- EXISTING UNPOWERED DUPLEX RECEPTACLE
- ISOLATED GROUND QUADPLEX RECEPTACLE (TWO ISO. GRD. DUPLEX RECEPTACLES IN ONE 2-GANG BOX UNDER A SINGLE RED IN COLOR COVERPLATE)
- QUADPLEX RECEPTACLE (CIRCUIT TO BE WIRED THRU OCCUPANCY SENSOR) INSTALL A PERMANENT LABEL ON EACH OUTLET STATING "SENSOR CONTROLLED OUTLET". SEE DETAIL ON SHEET E2
- AC — ABOVE COUNTER GFCI (GROUND FAULT CIRCUIT INTERRUPTING) DUPLEX RECEPTACLE
- WP — WEATHER PROOF GFCI (GROUND FAULT CIRCUIT INTERRUPTING) DUPLEX RECEPTACLE. COVER TO PROVIDE WEATHER PROOF PROTECTION WITH CORD AND PLUG IN USE.
- TELE-POWER POLE
- JUNCTION BOX
- PC — REMOTE PHOTO CONTROL
- COMPUTER DATA OUTLET BOX
- 4" SQUARE STEEL BOX MOUNTED FLUSH ON FLOOR W/QUADPLEX RECEPTACLE (SEE ABOVE RECEPTACLE DESCRIPTION). SEE DETAIL 4/E2 FOR INSTALLATION OF BOX
- 4" SQUARE STEEL BOX MOUNTED FLUSH ON FLOOR W/QUADPLEX ISOLATED GROUND RECEPTACLE (SEE ABOVE ISOLATED GROUND RECEPTACLE DESCRIPTION). SEE DETAIL 4/E2 FOR INSTALLATION OF BOX
- 4" SQUARE STEEL BOX MOUNTED FLUSH ON FLOOR W/QUADPLEX ISOLATED GROUND RECEPTACLE (SEE ABOVE ISOLATED GROUND RECEPTACLE DESCRIPTION). SEE DETAIL 4/E2 FOR INSTALLATION OF BOX. OUTLET COVER SHALL BE RED IN COLOR
- 2" x 4" RECTANGULAR STEEL BOX MOUNTED FLUSH ON FLOOR W/DUPLEX RECEPTACLE (SEE ABOVE RECEPTACLE DESCRIPTION). SEE DETAIL 4/E2 FOR INSTALLATION OF BOX
- NEMA L5-30R - SPECIAL RECEPTACLE
- MOTOR
- XX/XX — FUSED DISCONNECT (SAFETY) SWITCH W/ SWITCH AMPACITY / FUSE AMPACITY AS INDICATED
- NON-FUSED DISCONNECT (SAFETY) SWITCH
- POWER OR LIGHTING PANEL W/PANEL DESIGNATION SHOWN ON PLAN (SIZES & MOUNTING INDICATED ON PLANS)
- 24 HOUR EGRESS & SECURITY LIGHT, WIRE DIRECT TO ELECTRIC PANEL AHEAD OF ANY LOCAL SWITCHES AND LIGHTING CONTROL PANEL
- XR — WALL/CEILING MOUNTED COMBINATION "EXIT/EMERGENCY" SIGN W/SHADING INDICATING FACES
- EM — EMERGENCY LIGHTING FIXTURE WITH BATTERY
- PLP-11,13 — FEEDING PANEL AND CIRCUIT NUMBER(S); NOTE: EQUIPMENT GROUND CONDUCTOR NOT SHOWN; CIRCUIT CONDUCTORS; GROUNDED CIRCUIT CONDUCTOR (OR NEUTRAL)
- MD — MOTION DETECTOR - SEE EM SHEETS FOR MORE INFORMATION
- OS — OCCUPANCY SENSOR EQUAL TO "LEVITON, OSC20-MAW" WITH POWER PACK

AC	LOCATED ABOVE COUNTER	RTU	PACKAGED ROOFTOP UNIT	UPO	UN-POWERED OUTLET
AFF	ABOVE FINISHED FLOOR	IMC	INTERMEDIATE METALLIC TUBING	TS	TIME SWITCH
BCU	BLOWER COIL UNIT	LC	LIGHTING CONTRACTOR	W	WALL OUTLET (46" AFF SEE MOUNTING HEIGHTS)
CDU	CONDENSING UNIT	M	MOTOR STARTING		
EF	EXHAUST FAN	R	RED IN COLOR COVERPLATE	WP	WEATHERPROOF (ENCLOSURE)
EFU	ELECTRIC FURNACE	MP	MOTOR STARTING W/PILOT LIGHT	X	EXPLOSION PROOF ASSEMBLY
FURN	GAS FURNACE	NL	NIGHT LIGHT	GFCI	GRD./FAULT CIRCUIT INTERRUPT
AHU	AIR HANDLER	PEC	PHOTOELECTRIC CONTROL	EMT	ELECTRICAL METALLIC TUBING
HP	HEAT PUMP UNIT	PP	POWER PACK	CM	CEILING MOUNTED
		RGS	RIGID GALVANIZED STEEL		

CASCO + R|5
12 Sunnen Drive, Suite 100,
St. Louis, MO 63143
[illegible]821.1100

REVISIONS:

O'Reilly AUTO PARTS

CORPORATE OFFICES
233 SOUTH PATTERSON
SPRINGFIELD, MISSOURI 65802
417-862-2674 PHONE

PROJECT:
RE-MODEL O'REILLY AUTO PARTS STORE
103 E. GORDON AVE.
GORDONSVILLE, VA 22942

ELECTRICAL NOTES

COMMONWEALTH OF VIRGINIA
JOSEPH A. CARTER
Lic. No. 45515
PROFESSIONAL ENGINEER
10/17/18
Joseph A. Carter
License #0402045515
Exp. Date: 11/30/20
Professional of Record

DRAWN:	BJG
CHECKED:	HJA
DATE:	10-17-2018
JOB NO.:	118168 (GDV)
SHEET:	**E4**

COPYRIGHT 2018 - DESIGNS, DRAWINGS AND SPECIFICATIONS ARE INSTRUMENTS OF SERVICE AND ARE THE PROPERTY OF THE DESIGN PROFESSIONAL. REPRODUCTION PROHIBITED WITHOUT THE EXPRESSED WRITTEN CONSENT OF THE DESIGN PROFESSIONAL.

Order Plans @ www.LDIline.com