POPEYES INSTALLATION NOTES

NOTE: PROGRAMMING SEQUENCE SET-UP AT THE NCCC FOR LOCATIONS WITH OUTDOOR CAMERAS. OUTDOOR POLE MOUNT 15' ABOVE FINISHED PAVEMENT . USE GROUND ISOLATION TRANSFORMERS.

SECURITY CO. TO RUN FLEX CONDUIT INSIDE LIGHT POLES- EC TO RUN CONDUIT FROM RESTAURANT TO BASE OF LIGHT POLE & MOUNT JUNCTION BOX 15' ABOVE FINISHED PAVEMENT ON POLE.

OUTDOOR CAMERAS

A-1 : DRIVE THRU WINDOW AND CAR STACK
A-2 : SECONDARY, SINGLE ENTRY DOOR
A-3 : MAIN DOUBLE ENTRY DOOR
A-4 : REAR ENTRY DOOR
A-5 : ORDER CONFIRMATION BOARD AT DRIVE THRU

INDOOR CAMERAS

INDOOR CEILING MOUNT IN TINTED DOME.

FASTEN SCREW IN CEILING FOR DOMES SO NOT EASILY DROPPED OUT OF TILE.

B-1 : DINING ROOM AREA, H-COUNTER
B-2 : DINING ROOM AREA, H-COUNTER
B-3 : FRONT SALES COUNTER FROM DINING ROOM
B-4 : CONDIMENT AREA, H-COUNTER
B-5 : FRONT SALES COUNTER FROM PRODUCTION COUNTER
B-6 : DRIVE THRU
B-7 : PREPARATION AREA TOWARDS REAR OF BUILDING
B-8 : OFFICE
B-9 : BATTER / FRY AREA TOWARDS REAR OF BUILDING
B-10: REAR DOOR FROM STORAGE AREA
B-11 : STORAGE AREA FROM REAR DOOR
B-12 : WALK-IN COOLER (OPTIONAL)
B-13 : WALK-IN FREEZER (OPTIONAL)

OFFICE AREA

BAC- BURGLAR ALARM CONTROL-VISTA 20SEUL

D-VCR:
E-VCR :
F-MONITOR :

QUICK REFERENCE SHEETS

ALARM INSTRUCTION SHEET TO BE MOUNTED ON WALL IN EMPLOYEE ONLY AREA CLOSEST TO KEYPAD OR IN OFFICE AREA PER CUSTOMER INSTRUCTION.

FOR LOCATIONS WITH 6 OR MORE CAMERAS: ADD MULTIPLEXER.
LTC 2641/60-PLACE ON SECURITY LOCK FOR NO TAMPER

FOR LOCATIONS WITH 4 CAMERAS OR LESS: ADD VIDQUAD 4 CHANNEL LTC 2272/60

HUB: HOLD UP BUTTON 441494 SERIES LATCHING HUB.

MANAGER AREA-36" AFF OUT OF SITE FROM FRONT COUNTER.

DRIVE-THRU WINDOW-18" AFF & OUT OF SITE FROM OUTSIDE.

FRYER/PREP AREA

SL: STROBE LIGHT - AS SL-401B-BLUE STROBE MOUNT BEHIND MENU BOARD, IT WILL FLASH CONTINUOUSLY WHILE BACK DOOR IS OPEN.

S: SOUNDER-AS-PAL328N-LOW TONE SOUNDER MOUNT WITH STROBE BEHIND MENU BOARD, IT WILL SOUND WHEN BACK DOOR IS OPENED, MANAGER WILL SILENCE ST SOUNDER AT KEYPAD AFTER 1 TONE.

MD: MOTION DETECTOR-AP 669 PIR-360 MOTION MOUNT IN STOVE AREA TO GET AREA FROM DRIVE-UP WINDOW AND GENERAL REAR AREA.

LOBBY/PERIMETER AREA/BACK OF HOUSE

KP: KEY PAD-MOUNT 40" AFF

GB: FG 1025 GLASS BREAK-LOBBY GLASS ONE EACH SIDE OF BUILDING SEE DRAWING FOR DEVICE PLACEMENT

C: B4039 CONTACT-ALL EXTERIOR DOORS

BACK DOOR CONTACT TO ACT AS ALARM POINT FOR BACK DOOR ALARM-24 HOUR LOCATION POINT-SOUNDER & BLUE STROBE TO ACTIVATE WHEN BACK DOOR IS OPEN

HUB: 3050CT SERIES LATCHING HUB IN COOLER/FREEZER-MOUNT 18" AFF ON HINGE SIDE OF DOOR, STUB UP CONDUIT TO PROTECT WIRING FROM CONDENSATION/DAMAGE NO DRIP LOOP AT HUB

POC : POINT OF CONNECTION TO NKL SAFE-PIGTAIL PROVIDED BY NKL SAFE

POPEYES ADD ON MODIFICATION NAMES AND PHONE NUMBERS

1. INSTALLER PLEASE CONTACT YOUR SECURITY AND ALARM SYSTEM VENDOR FOR ANY ADD-ONS OR MODIFICATIONS TO YOUR JOB. THEY WILL CONTACT THE NATIONAL ACCOUNT MANAGER FOR APPROVALS/PAPERWORK.
2. CONTACT THE NATIONAL ACCOUNT MANAGER.

POPEYES PROBLEM RESOLUTION NAMES & PHONE NUMBERS

NCCC PROJECT COORDINATOR:
NAME:
PHONE NUMBER:

NATIONAL ACCOUNT MANAGER:
POPEYES:
NEW INSTALLS/NEW CONSTRUCTION MANAGER
EXISTING SITES/RENOVATION PROJECTS/FACILITIES MANAGER
LOSS PREVENTION DIRECTOR:

POPEYES INSTALLATION ACCEPTANCE FORM/CHECKLIST

FOR INSTALL SITE MODIFICATIONS IE/DEVICE PLACEMENT CHANGES FROM BLUEPRINT, HAVE CUSTOMER INITIAL MODIFY PER SITE OPTION TO SHOW APPROVAL

CAMERAS

A-CAMERA : FOR LOCATIONS WITH OUTDOOR CAMERAS

OUTDOOR POLE MOUNT 15' ABOVE FINISHED PAVEMENT

YES__________ N/A__________ MODIFY PER SITE__________

GROUND ISOLATION TRANSFORMERS

YES__________ N/A__________ MODIFY PER SITE__________

ADT TO RUN CONDUIT INSIDE LIGHT POLES-EC TO RUN CONDUIT FROM RESTAURANT TO BASE OF LIGHT POLE & MOUNT JUNCTION BOX 15' ABOVE FINISHED PAVEMENT ON POLE

YES__________ N/A__________ MODIFY PER SITE__________

A-1; DRIVE THRU WINDOW AND CAR STACK
YES__________ N/A__________ MODIFY PER SITE__________

A-2: SECONDARY, SINGLE ENTRY DOOR
YES__________ N/A__________ MODIFY PER SITE__________

A-3: MAIN DOUBLE ENTRY DOOR

YES__________ N/A__________ MODIFY PER SITE__________

A-4: REAR ENTRY DOOR

YES__________ N/A__________ MODIFY PER SITE__________

A-5: ORDER CONFIRMATION BOARD AT DRIVE THRU

YES__________ N/A__________ MODIFY PER SITE__________

B-CAMERA: FOR LOCATIONS WITH INDOOR CAMERAS INDOOR CEILING MOUNT IN TINTED DOME

YES__________ N/A__________ MODIFY PER SITE__________

FASTEN SCREW IN CEILING FOR DOMES SO NOT EASILY DROPPED OUT OF TILE

YES__________ N/A__________ MODIFY PER SITE__________

B-1: DINING ROOM AREA, H-COUNTER

YES__________ N/A__________ MODIFY PER SITE__________

B-2: DINING ROOM AREA, H-COUNTER

YES__________ N/A__________ MODIFY PER SITE__________

B-3: FRONT SALES COUNTER FROM DINING ROOM

YES__________ N/A__________ MODIFY PER SITE__________

B-4: CONDIMENT COUNTER, H-COUNTER AREA

YES__________ N/A__________ MODIFY PER SITE__________

B-5: FRONT SALES COUNTER FROM PRODUCTION COUNTER

YES__________ N/A__________ MODIFY PER SITE__________

B-6: DRIVE THRU

YES__________ N/A__________ MODIFY PER SITE__________

B-7: PREPARATION AREA TOWARDS REAR OF BUILDING

YES__________ N/A__________ MODIFY PER SITE__________

B-8: OFFICE

YES__________ N/A__________ MODIFY PER SITE__________

B-9: BATTER FRY AREA TOWARDS REAR OF BUILDING

YES__________ N/A__________ MODIFY PER SITE__________

B-10: REAR DOOR FROM STORAGE AREA

YES__________ N/A__________ MODIFY PER SITE__________

B-11: STORAGE AREA FROM REAR DOOR

YES__________ N/A__________ MODIFY PER SITE__________

B-12 & B-13: COOLER FREEZER BOXES

YES__________ N/A__________ MODIFY PER SITE__________

OFFICE AREA

D-VCR LOCK BOX: TC3922 SERIES

YES__________ N/A__________ MODIFY PER SITE__________

E-VCR: LTC 3924 SERIES PLACE ON SECURITY LOCK FOR NO TAMPER

YES__________ N/A__________ MODIFY PER SITE__________

QUICK REFERENCE SHEETS

ALARM INSTRUCTION SHEET TO BE MOUNTED ON WALL IN EMPLOYEE ONLY AREA CLOSEST TO KEYPAD OR IN OFFICE AREA PER CUSTOMER INSTRUCTION

YES__________ N/A__________ MODIFY PER SITE__________

VCR INSTRUCTION SHEET(2) 1-REVIEW & 1-RECORD-TO BE MOUNTED ON WALL CLOSEST TO VCR

YES__________ N/A__________ MODIFY PER SITE__________

FOR LOCATIONS WITH 6 OR MORE CAMERAS: ADD MULTIPLEXER

LTC 2641/60-PLACE ON SECURITY LOCK FOR NO TAMPER

YES__________ N/A__________ MODIFY PER SITE__________

FOR LOCATIONS WITH 4 CAMERAS OR LESS:

ADD VIDQUAD 4 CHANNEL LTC 2272/60

YES__________ N/A__________ MODIFY PER SITE__________

HUB: HOLD UP BUTTON 441494 SERIES LATCHING HUB

MANAGER AREA-36" AFF OUT OF SITE FROM FRONT COUNTER

YES__________ N/A__________ MODIFY PER SITE__________

DRIVE-THRU WINDOW-18" AFF & OUT OF SITE FROM OUTSIDE

YES__________ N/A__________ MODIFY PER SITE__________

LOBBY/PERIMETER AREA/BACK OF HOUSE

KP: KEYPAD-MOUNT 40" AFF WALL ENTERING KITCHEN AREA FROM LOBBY

YES__________ N/A__________ MODIFY PER SITE__________

GB: FG 1025 GLASS BREAK- LOBBY GLASS ONE EACH SIDE OF BUILDING SEE DRAWING FOR DEVICE PLACEMENT

YES__________ N/A__________ MODIFY PER SITE__________

C: B4039 CONTACT-ALL EXTERIOR DOORS

YES__________ N/A__________ MODIFY PER SITE__________

BACK DOOR CONTACT TO ACT AS ALARM POINT FOR BACK DOOR ALARM-24 HOUR LOCATION POINT-SOUNDER & BLUE STROBE TO ACTIVATE WHEN BACK DOOR IS OPEN

YES__________ N/A__________ MODIFY PER SITE__________

YES__________ N/A__________ MODIFY PER SITE__________

POC: POINT OF CONNECTION TO NKL SAFE-PIGTAIL PROVIDED BY NKL SAFE

YES__________ N/A__________ MODIFY PER SITE__________

FRYER/PREP AREA

SL: STROBE LIGHT-AS SL-401B-BLUE STROBE MOUNT BEHIND MENU BOARD, IT WILL FLASH CONTINUOUSLY WHILE BACK DOOR IS OPEN

YES__________ N/A__________ MODIFY PER SITE__________

S: SOUNDER-AS-PAL328N-LOW TONE SOUNDER MOUNT WITH STROBE BEHIND MENU BOARD, IT WILL SOUND WHEN BACK DOOR IS OPENED, MANAGER WILL TONE SILENCE SOUNDER AT KEYPAD AFTER 1

YES__________ N/A__________ MODIFY PER SITE__________

MD: MOTION DETECTOR-AP 669 PIR - 360 MOTION MOUNT IN STOVE AREA TO GET AREA FROM DRIVE-UP WINDOW AND GENERAL REAR AREA

YES__________ N/A__________ MODIFY PER SITE__________

POPEYES MATERIAL LIST

CAMERAS

A-CAMERA:
5 OR 6 LOCATIONS (LOCATIONS W/OUTDOOR CAMERAS)
2 OR 3 GIT100-GROUND ISOLATION TRANSFORMERS
LTC 0430/20-38 SERIES CAMERA W/ 3.5-8MM VARIFOCAL AUTOIRIS LENS
TC 9340A SERIES OUTDOOR HOUSING
TC9211PM POLE MOUNT ADAPTER
BNC CONNECTORS FOR PLENUM CABLE
FLEX CONDUIT FOR OUTDOOR CAMERAS RUN INSIDE POLE FOR CABLING

INDOOR CEILING MOUNT IN TINTED DOME
NOTE: FASTEN SCREW IN CEILING FOR DOMES SO NOT EASILY DROPPED OUT OF TILE LTC 0430/20-38 SERIES CAMERA W/ 3.5MM-8MM VARIFOCAL AUTOIRIS LENS
TC 9345MT7 INDOOR TINTED DOME
BNC CONNECTORS FOR PLENUM CABLE

OFFICE AREA

BAC-BURGLAR ALARM CONTROL: VISTA 20SEUL
D-VCR LOCK BOX : TC3922 SERIES
E-VCR: LTC 3924 SERIES PLACE ON SECURITY LOCK FOR NO TAMPER
F-MONITOR: LTC 2813/60 SERIES
ALTV248: 8 POSITION POWER SUPPLY
QUICK REFERENCE SHEETS
ALARM INSTRUCTION SHEET TO BE MOUNTED ON WALL IN EMPLOYEE ONLY AREA CLOSEST TO KEYPAD OR IN OFFICE AREA PER CUSTOMER INSTRUCTION
VCR INSTRUCTION SHEETS (2) 1-REVIEW & 1-RECORD-TO BE MOUNTED ON WALL CLOSEST TO VCR

FOR LOCATIONS WITH 6 OR MORE CAMERAS : ADD MULTIPLEXER LTC 2641/60-PLACE ON SECURITY LOCK FOR NO TAMPER

FOR LOCATIONS WITH 4 CAMERAS OR LESS : ADD VIDQUAD 4 CHANNEL LTC 2272/60

2-HUB: HOLD UP BUTTON 441494 SERIES LATCHING HUB

STOVE/PREP AREA

SL: STROBE LIGHT-AS SL-401B-BLUE STROBE MOUNT BEHIND MENU BOARD, IT WILL FLASH CONTINUOUSLY WHILE BACK DOOR IS OPEN

S: SOUNDER-AS-PAL328N-LOW TONE SOUNDER MOUNT WITH STROBE BEHIND MENU BOARD, IT WILL SOUND WHEN BACK DOOR IS OPENED, MANAGER WILL SILENCE SOUNDER AT KEYPAD AFTER 1ST TONE

MD; MOTION DETECTOR-AP 669 PIR-360 MOTION MOUNT IN STOVE AREA TO GET AREA FROM DRIVE-UP WINDOW AND GENERAL REAR AREA

LOBBY/PERIMETER AREA/BACK OF HOUSE

KP: KEYPAD-MOUNT 40" AFF WALL ENTERING KITCHEN AREA FROM LOBBY

2-GB: FG 1025 GLASS BREAK-LOBBY GLASS ONE EACH SIDE OF BUILDING SEE DRAWING FOR DEVICE PLACEMENT

3 OR 4-C: B4039 CONTACT-ALL EXTERIOR DOORS BACK DOOR CONTACT TO ACT AS ALARM POINT FOR BACK DOOR ALARM-24 HOUR LOCAL POINT-SOUNDER & BLUE STROBE TO ACTIVATE WHEN BACK DOOR IS OPEN

1 OR 2-HUB: 3050CT SERIES LATCHING HUB IN COOLER/FREEZER-MOUNT 18" AFF ON HINGE SIDE OF DOOR SUB UP IN CONDUIT

1-POC: POINT OF CONNECTION TO NKL SAFE-PIGTAIL PROVIDED BY NKL SAFE

RELAYS FOR BACK DOOR/POC/ZONE EXPANSION
TELCO JACK
WATTS LINE

SYMBOL LEGEND

DEVICE	SYMBOL	QTY.	DEVICE	SYMBOL	QTY.
DOOR CONTACT	C	5	Dome	D	13
HORN/SOUNDER	SN	1	14" Monitor	M 14"	1
CONTROL PANEL	CP	1	DIGITAL VIDEO RECORDER	DVR	1
KEY PAD	KP	2	IEI KEYPAD	IEI	1
MOTION DETECTOR (CEILING MOUNT)	M	1	EXTERIOR DOME CAMERA (Additional camera for dual drive-thru order design)		5
GLASS BREAK	GB	2	STROBE LIGHT	SL	1
HOLD UP BUTTON (Additional button for 2nd drive-thru window design)	●	6	PIEZO	P	1

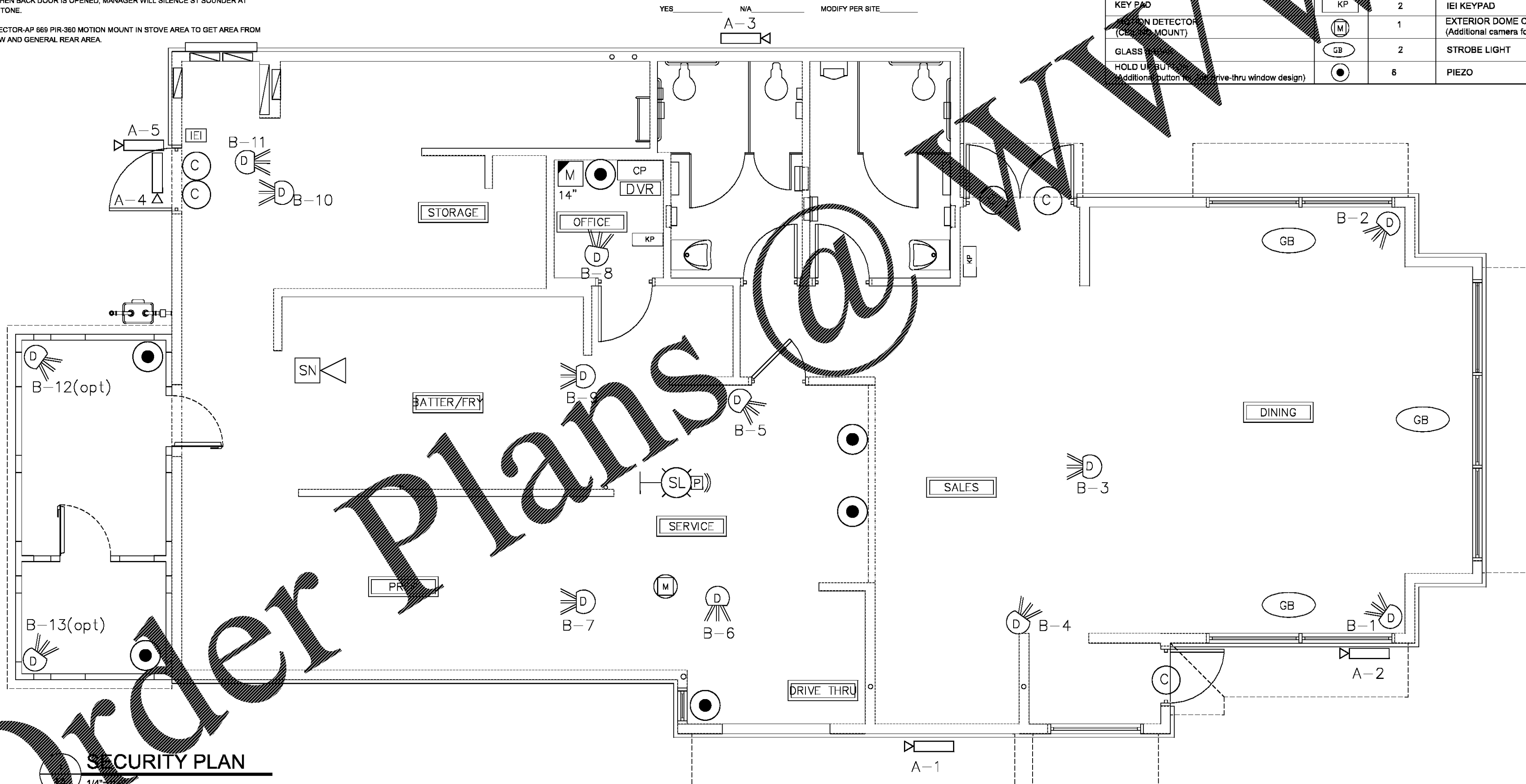

SECURITY PLAN
1/4"=1'-0"

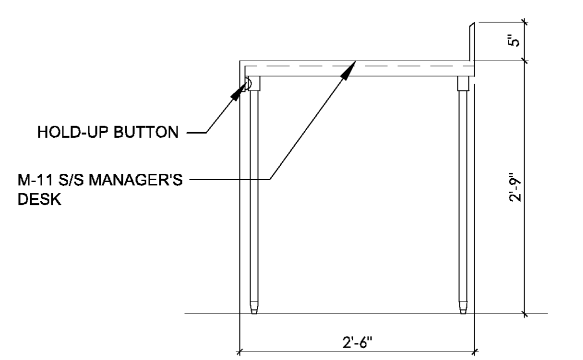

2
E5
FRONT COUNTER PANIC
1/4"=1'-0"

VERIFY LOW VOLTAGE PERMIT REQUIREMENTS

ELECTRICAL REQUIREMENTS

ELECTRICAL SUPPLY ALL 120 VAC FOR CAMERA SYSTEM AND BURGLAR ALARM SYSTEM

SUPPLY 120 VAC FOR ALL CCTV HEAD END EQUIPMENT.
SUPPLY 120 VAC FOR BURGLAR ALARM PANEL.
FOR OUTDOOR CAMERAS ALL TRENCHING, CONDUIT AND PULL STRINGS, AS WELL
AS A BACK BOX MOUNTED ON THE POLE FOR ELECTRICAL AND COAX CONNECTIONS.

SECURITY CO. SUPPLY AND INSTALL ALL SECURITY EQUIPMENT RUN ALL LOW VOLTAGE CABLE FOR THE SECURITY SYSTEM. SET UP, TEST AND TRAIN ON CCTV AND BURGLAR ALARM SYSTEMS. SPECIFY ALL LOCATIONS OF DEVICES.

M Elisabeth Hyde
ALABAMA LICENSED NO. 17960 PROFESSIONAL ENGINEER M. ELISABETH HYDE
9/27/18

POPEYES
400 PERIMETER CENTER TERRACE
SUITE 1000
ATLANTA, GA 30346
404-459-4450

hendon huckestein architects, PC
architecture . planning . interior design
2126 Morris Avenue Birmingham, AL 35203
Phone (205) 322-1751
Fax (205) 322-1778
email info@hplusha.com
www.hplusha.com

DRAWN BY: DB
CHECKED BY: MRW, EH
DATE: 09.27.2018
H+HA PROJECT #:18064.14

PREMIER CAJUN KINGS, LLC - POPEYES
Near 431 Main St,
Shorter, AL 36075
LOUISIANA KITCHEN PLK DESIGN STANDARDS
PLKI 1846-DL PROTOTYPE: 46 SEATS / DUAL-LINE PRODUCTION

LOUISIANA KITCHEN
POPEYES

PERMIT/BID SET 09.27.18

SECURITY PLAN

E5

DATE: 9.27.18

CHECKED: MEH

Order Plans @ WWW.LDILine.com