DOOR ①

OPENING: 3'-0"x7'-0"x1 3/4"x AD x AF
MATERIAL: ALUMINUM / GLASS
FINISH: CLEAR

HARDWARE

ENTRANCE DOOR HARDWARE SHALL CONSIST OF OFFSET PIVOTS, ADAMS RITE MS 1852S DEAD BOLT LOCK, NORTON 1605 SURFACE CLOSERS WITH BACK CHECK, 9" "CLASSIC" STRAIGHT DOOR PULLS IN POLISHED STAINLESS OR CHROME, AND STANDARD THRESHOLDS. LOCKS, CYLINDERS, AND THRESHOLDS SHALL BE OMITTED ON INTERIOR VESTIBULE DOORS. (IF VESTIBULE IS PROVIDED) DUMMY CYLINDERS SHALL BE PROVIDED ON THE EXTERIOR OF ALL DOORS EXCEPT AT MAIN ENTRY.

FRAME

MATERIAL: ALUMINUM
FINISH: CLEAR

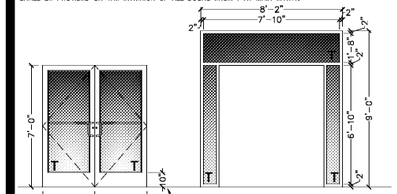

HEAD — REFER TO SHEET A-9
JAMB — REFER TO SHEET A-9
SILL (C)

DOOR ① SCALE: 1/4" = 1'-0"
DOOR FRAME SCALE: 1/4" = 1'-0"

T = TEMPERED

DOOR ②

OPENING: 3'-0"x7'-0"x1 3/4"x AD x AF
MATERIAL: ALUMINUM / GLASS
FINISH: CLEAR

HARDWARE

HINGES, OFFSET PIVOTS
LOCKSET: ADAMS RITE DEAD BOLT, MS 1852S
FLUSH BOLTS, 1 PAIR
SURFACE CLOSER:
NORTON 1605 WITH BACK CHECK
9" "CLASSIC" STRAIGHT DOOR
PULLS IN POLISHED STAINLESS OR CHROME, AND STANDARD THRESHOLDS, (STANDARD)

FRAME

MATERIAL: ALUMINUM
FINISH: CLEAR

REMARKS

DUMMY CYLINDERS
SHALL BE PROVIDED ON THE EXTERIOR OF ALL DOORS EXCEPT AT MAIN ENTRY.

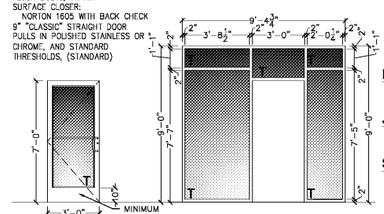

HEAD — REFER TO SHEET A-9
JAMB — REFER TO SHEET A-9
SILL (G)

DOOR ② SCALE: 1/4" = 1'-0"
DOOR FRAME SCALE: 1/4" = 1'-0"

T = TEMPERED

DOOR ③

OPENING: 4'-0"x7'-0"x1 3/4"x MD x MF
MATERIAL: HOLLOW METAL
FINISH: PAINT - REFER TO SHEET A-2

HARDWARE

DOOR TO RECEIVE:
HINGES: 4 EACH HAGER: BB1168 4 1/2" x 4 1/2" x USP x NRP
EXIT DEVICE: 1 EACH VON DUPRIN 22EO x 689 (DOOR #3)
CLOSER: 1 EACH LCN 4116 EDA (DOOR #3) & LCN 4116 EDA (DOOR #4)
VIEWER: 1 EACH ROCKWOOD 622 x 626
KICKPLATES: 1 EACH HAGER 193S 10"x2" LDW 628 (INSTALL W/FLAT HEAD PHILLIPS HEAD SCREWS)
THRESHOLD: 1 EACH NATIONAL GUARD 325 x 48" x AL
DOOR SWEEP: 1 EACH NATIONAL GUARD 200NA x 48"
WEATHERSTRIP: 1 SET NATIONAL GUARD 160SA 1848", 2@84"
DOOR 4: MATCH LOCKSET/TRIM OF DOOR #4
PROVIDE 8"Hx16"W LOUVER AT BOTTOM OF DOOR

FRAME

MATERIAL: HOLLOW METAL
FINISH: PAINT - REFER TO SHEET A-2

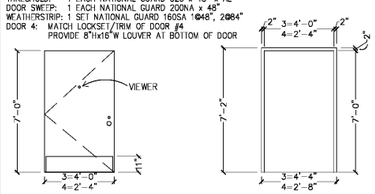

HEAD (A)
JAMB (B)
SILL (C)

DOOR ③ SCALE: 1/4" = 1'-0"
DOOR FRAME SCALE: 1/4" = 1'-0"

DOOR ④

OPENING: 3'-0"x6'-8"x1 3/4"WD x AF
MATERIAL: SOLID CORE HPL
FINISH: REFERENCE ID SHEETS.

HARDWARE

EACH DOOR TO RECEIVE:
HINGES: 3 EACH HAGER: BB1279 4 1/2 x 4 1/2 x 652
LOCKSET: 1 EACH SCHLAGE, AL53PD SAT x 626
CLOSER: 1 EACH LCN 4111 EDA
FLOOR STOP: 1 EACH HAGER 241F x US26D
KICKPLATES: 2 EACH HAGER 193S 10"x2" LDW 628 (INSTALL W/FLAT HEAD PHILLIPS HEAD SCREWS)
SILENCERS: 3 EACH HAGER 307D RBR
DOOR VIEWER: 1 EACH ROCKWOOD 622 x 626

FRAME

MATERIAL: ALUMINUM
FINISH: REFERENCE ID SHEETS.

REMARKS

SIGN PACKAGE: 1 "KITCHEN" AND CORRESPONDING SIGNAGE IN GRADE TWO BRAILLE PER ADA REQUIREMENTS. SIGNS FURNISHED BY DECOR SUPPLIER. SIGNS INSTALLED BY GENERAL CONTRACTOR PER ADA REQUIREMENTS.
AS AN OPTION IN LIEU OF SOLID CORE DOORS AND HOLLOW METAL FRAMES, PROVIDE MARLITE HPL DOORS WITH ALUMINUM FRAMES (REF. ID SHEETS FOR COLOR)

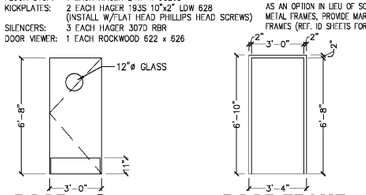

HEAD (D)
JAMB (E)
SILL (F)

DOOR ④ SCALE: 1/4" = 1'-0"
DOOR FRAME SCALE: 1/4" = 1'-0"

DOOR ⑤

OPENING: 3'-0"x6'-8"x1 3/4"x WD x MF
MATERIAL: SOLID CORE HPL
FINISH: REFERENCE ID SHEETS

HARDWARE

EACH DOOR TO RECEIVE:
HINGES: 3 EACH HAGER: BB1279 4 1/2 x 4 1/2 x 652
LOCKSET: ** 1 EACH FALCON: D271 X 626
CLOSER: 1 EACH LCN 4111 EDA
PUSH PLATE: 1 EACH HAGER 305 4x16 628
PULL PLATE: *** 1 EACH HAGER H33E 4x16 628
FLOOR STOP: 1 EACH HAGER 241F x US26D
KICKPLATES: 2 EACH HAGER 193S 10"x2" LDW 628 (INSTALL W/FLAT HEAD PHILLIPS HEAD SCREWS)
SILENCERS: 3 EACH HAGER 307D RBR
NOTE:
UNDERCUT DOOR 1" FOR AIR FLOW WHEN HVAC SUPPLY NOT PROVIDED. (REF. SHEET M-1)

FRAME

MATERIAL: ALUMINUM
FINISH: REFERENCE ID SHEETS

REMARKS

SIGN PACKAGE: 1 "LADIES", 1 "GENTLEMEN" AND CORRESPONDING SIGNAGE IN GRADE TWO BRAILLE PER ADA REQUIREMENTS. SIGNS FURNISHED BY DECOR SUPPLIER. SIGNS INSTALLED BY GENERAL CONTRACTOR PER ADA REQUIREMENTS.
AS AN OPTION IN LIEU OF SOLID CORE DOORS AND HOLLOW METAL FRAMES, RPOVIDE MARLITE HPL DOORS WITH ALUMINUM FRAMES (REF. ID SHEETS FOR COLOR)

** DELETE IF MULTIPLE OCCUPANCY RESTROOM
***OPTIONAL SANITGRASP #SG-101

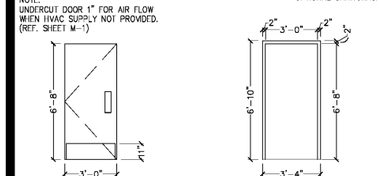

HEAD (D)
JAMB (E)
SILL (F)

DOOR ⑤⑥ SCALE: 1/4" = 1'-0"
DOOR FRAME SCALE: 1/4" = 1'-0"

DOOR ⑥

OPENING: 3'-0"x6'-8"
MATERIAL: SOLID CORE HPL
FINISH: REFERENCE ID SHEETS.

HARDWARE

DOOR TO RECEIVE:
HINGES: 2 EACH HAGER: 1250 4 1/2 x 4 1/2 x 652
SPRING HINGES FOR SELF-CLOSING DOOR.
LOCKSET: 1 EACH SCHLAGE, AL40S SAT x 626
WALL STOP: 1 EACH HAGER 236W x 630
SILENCERS: 2 EACH HAGER 307D RBR

FRAME

MATERIAL: ALUMINUM
FINISH: REFERENCE ID SHEETS.

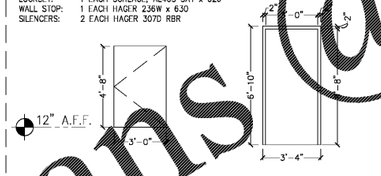

HEAD (D)
JAMB (E)
SILL (F)

DOOR ⑤⑥ SCALE: 1/4" = 1'-0"
DOOR FRAME SCALE: 1/4" = 1'-0"

DOOR ⑦

OPENING: 2'-6"x6'-8"
MATERIAL: SOLID CORE HPL
FINISH: REFERENCE SHEET ID SHEETS.

HARDWARE

DOOR TO RECEIVE:
HINGES: 2 EACH HAGER: 1250 4 1/2 x 4 1/2 x 652
SPRING HINGES FOR SELF-CLOSING DOOR.
LOCKSET: 1 EACH SCHLAGE, AL40S SAT x 626
WALL STOP: 1 EACH HAGER 236W x 630
SILENCERS: 2 EACH HAGER 307D RBR

FRAME

MATERIAL: ALUMINUM
FINISH: REFERENCE ID SHEETS.

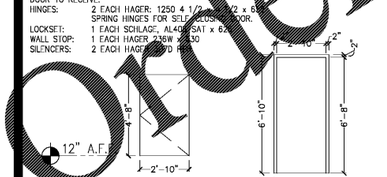

HEAD (D)
JAMB (E)
SILL (F)

DOOR ⑨ SCALE: 1/4" = 1'-0"
DOOR FRAME SCALE: 1/4" = 1'-0"

DOOR ⑩

OPENING: 3'-0"x6'-8"
MATERIAL: SOLID CORE HPL/GLASS
FINISH: REFERENCE ID SHEETS.

HARDWARE

DOOR TO RECEIVE:
HINGES: 3 EACH HAGER: BB1279 4 1/2 x 4 1/2 x 652
LOCKSET: 1 EACH SCHLAGE, AL53PD SAT x 626
FLOOR STOP: 1 EACH HAGER 241F x US26D
KICKPLATES: 2 EACH HAGER 193S 10"x2" LDW 628 (INSTALL W/FLAT HEAD PHILLIPS HEAD SCREWS)
SILENCERS: 3 EACH HAGER 307D RBR

FRAME

MATERIAL: ALUMINUM
FINISH: REFERENCE ID SHEETS.

REMARKS

AS AN OPTION, IN LIEU OF SOLID CORE DOORS AND HOLLOW METAL FRAMES, PROVIDE MARLITE HPL DOORS WITH ALUMINUM FRAMES (REF. ID SHEETS FOR COLOR)

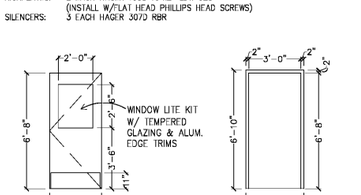

HEAD (D)
JAMB (E)
SILL (F)

DOOR ⑩ SCALE: 1/4" = 1'-0"
DOOR FRAME SCALE: 1/4" = 1'-0"

DOOR ⑪⑫

OPENING: 4'-0"x7'-0"x1 3/4"x MD x MF
MATERIAL: HOLLOW METAL
FINISH: PAINT - REFER TO SHEET A-2

HARDWARE

DOOR TO RECEIVE:
HINGES: 4 EACH HAGER: BB1168 4 1/2" x 4 1/2" x USP x NRP
EXIT DEVICE: 1 EACH VON DUPRIN 22EO x 689 (DOOR #3)
CLOSER: 1 EACH LCN 4111 EDA
VIEWER: 1 EACH ROCKWOOD 622 x 626
KICKPLATES: 1 EACH HAGER 193S 10"x2" LDW 628 (INSTALL W/FLAT HEAD PHILLIPS HEAD SCREWS)
THRESHOLD: 1 EACH NATIONAL GUARD 325 x 48" x AL
DOOR SWEEP: 1 EACH NATIONAL GUARD 200NA x 48"
WEATHERSTRIP: 1 SET NATIONAL GUARD 160SA 1848", 2@84"
DOOR 4: MATCH LOCKSET/TRIM OF DOOR #4
PROVIDE 8"Hx16"W LOUVER AT BOTTOM OF DOOR

FRAME

MATERIAL: HOLLOW METAL
FINISH: PAINT - REFER TO SHEET A-2

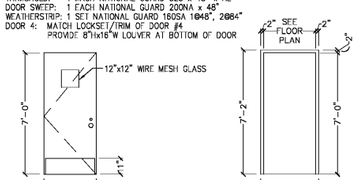

HEAD (A)
JAMB (B)
SILL (C)

DOOR ⑪⑫ SCALE: 1/4" = 1'-0"
DOOR FRAME SCALE: 1/4" = 1'-0"

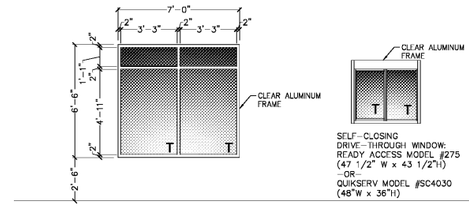

WINDOW (A) SCALE: 1/4" = 1'-0"

SELF-CLOSING DRIVE-THROUGH WINDOW: READY ACCESS MODEL #275 (47 1/2" W x 43 1/2"H)
-OR-
QUIKSERV MODEL #SC4030 (48"W x 36"H)

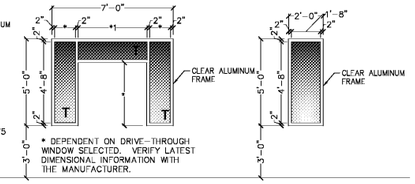

* DEPENDENT ON DRIVE-THROUGH WINDOW SELECTED. VERIFY LATEST DIMENSIONAL INFORMATION WITH THE MANUFACTURER.

WINDOW (B) SCALE: 1/4" = 1'-0"
WINDOW (C) SCALE: 1/4" = 1'-0"

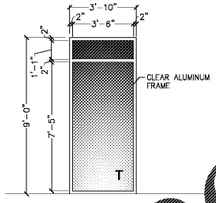

WINDOW (E) SCALE: 1/4" = 1'-0"

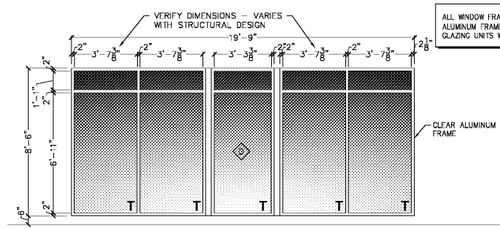

ALL WINDOW FRAMING TO BE CLEAR-ANODIZED ALUMINUM FRAMING WITH CLEAR 1" INSULATED GLAZING UNITS WITH A LOW-E COATING.

WINDOW (D) SCALE: 1/4" = 1'-0"

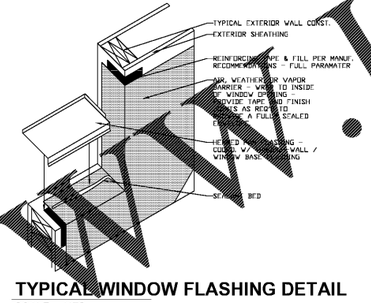

TYPICAL WINDOW FLASHING DETAIL
SCALE: NTS

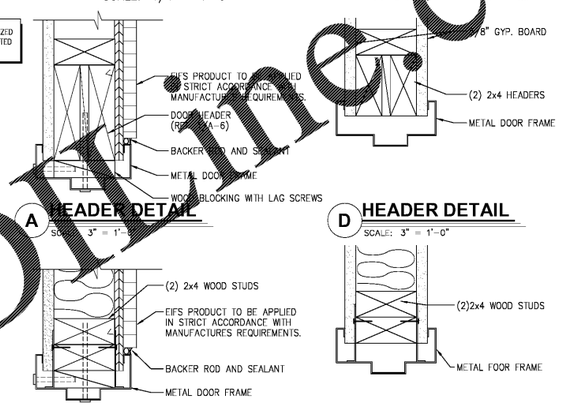

A HEADER DETAIL SCALE: 3" = 1'-0"
D HEADER DETAIL SCALE: 3" = 1'-0"
B JAMB DETAL SCALE: 3" = 1'-0"
E JAMB DETAIL SCALE: 3" = 1'-0"

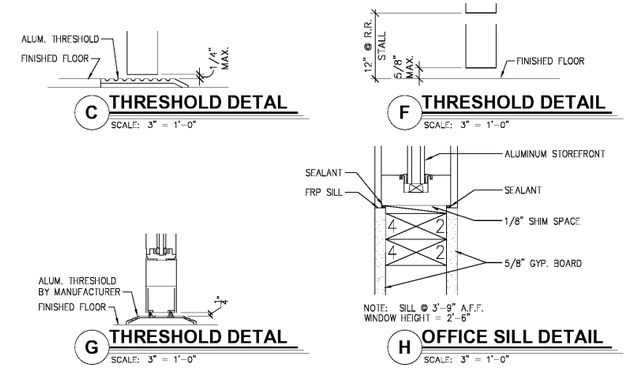

C THRESHOLD DETAL SCALE: 3" = 1'-0"
F THRESHOLD DETAIL SCALE: 3" = 1'-0"
G THRESHOLD DETAL SCALE: 3" = 1'-0"
H OFFICE SILL DETAIL SCALE: 3" = 1'-0"

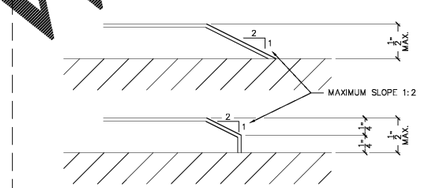

ACCESSIBLE THRESHOLD REQUIREMENTS
SCALE: 1'-0" = 1'-0"

Specified Products and Approved Equals

Hinges - Provide features, functions, size and finish as shown in hardware sets.

HAGER	BB1279	BB1168	253
MCKINNEY	TA2714	T4A3786	
BOMMER	BB5000	BB5004	

Locks - Provide features, functions and finish as shown in hardware sets.

FALCON - DEADLOCK	D871		NO SUBSTITUTIONS
SCHLAGE	AL53PD	AL40S	
YALE	AU5307LN	AU5302LN	
FALCON	B511D	B301D	

Exit Device - Provide features, functions and finish as shown in hardware sets.

VON DUPRIN	22 EO		
YALE	2100 EO		
SARGENT	3826 EO		

Closers - Provide features, functions and finish as shown in hardware sets.

LCN	1461	4115 H-CUSH	
YALE	3301	4421T / 4421T	
DORMA	8616	8916 DST / 8956 DST	

Push/Pull, KP, Stops, Etc. - Provide features, functins, size and finish as shown in hardware sets.

HAGER	KICKPLT 193S	PULL PLT H33E	PUSH PLT 305	FL STOP 241F	WALL STOP 236W	VIEWER 1756
ROCKWOOD	K1050 B3E	BF106 X 70C	70C	441CU	409	622
TRIMCO	K0050	1017-3x2 1/2 PROJ.	1001-3	1211	1270WV	976U

Weatherstripping, Thresholds, Etc. - provide features, functions, size and finish as shown in hardware sets.

NATIONAL GUARD	THRESHOLD 325A	SWEEP 200NA	WEATHERSTRIP 160SA
PEMKO	229A	315CN	303AS
ZERO	1675A	39A	99A

Order Plans @ WWW.LDIMine.com

DRAWN BY: MRW
CHECKED BY: [illegible]
DATE: 11/06/18

NO.	DATE	REVISION
	11/06/18	RELEASED FOR CONSTRUCTION

PREMIER KINGS, INC.
5529 CARMICHAEL ROAD
MONTGOMERY, ALABAMA 36117
PHONE:
LINDSEY@KALABAMA.COM

hendon huckestein architects, PC
2126 Manik Avenue
Birmingham AL 35203
Phone (205) 323-1751
Fax (205) 323-1778
email info@hendonhuckestein.com
www.hendonhuckestein.com
architecture . planning . interior design

STATE of ALABAMA
Hendon Huckestein Architects, PC
4152
Erik N. Hendon
REGISTERED ARCHITECT

PROJECT #18026.18
ROC-BG 20/20 IMAGE: APRIL 2015 DESIGN RELEASE
BURGER KING RESTAURANT
SHORTER, AL

DOOR SCHEDULE AND DETAILS

A-10