Order Plans @ WWW.LDILine.com

ELECTRICAL SYMBOLS LEGEND

03.30.18

(SYMBOLS APPLY ONLY WHEN USED ON DRAWINGS)

SYMBOL	DESCRIPTION
	LIGHT FIXTURE (WALL MOUNTED/CEILING MOUNTED)
	LIGHT FIXTURE
	LIGHT FIXTURE, NIGHT LIGHT
	VOLUMETRIC LIGHT FIXTURE
	TRACK LIGHTING
	EXIT FIXTURE (WALL MOUNTED/CEILING MOUNTED)
	EMERGENCY LIGHT (WALL MOUNTED/CEILING MOUNTED)
	EMERGENCY LIGHT REMOTE HEADS (WALL MOUNTED/CEILING MOUNTED)
$	SINGLE POLE SWITCH
$3	3-WAY SWITCH
$4	4-WAY SWITCH
$K	KEYED SWITCH
$D	DIMMER SWITCH
$VS	VARIABLE SPEED SWITCH
$M	MANUAL MOTOR SWITCH
$OS	SINGLE POLE OCCUPANCY SENSOR SWITCH
$OS2	DOUBLE POLE OCCUPANCY SENSOR SWITCH
OS	CEILING MOUNTED OCCUPANCY SENSOR SWITCH
	RECEPTACLE, DUPLEX
	RECEPTACLE, DUPLEX, MOUNTED HORIZONTALLY
	RECEPTACLE, GFI
	RECEPTACLE, DUPLEX FLUSH FLOOR
	RECEPTACLE, DUPLEX ISOLATED GROUND FLUSH FLOOR
	RECEPTACLE, DOUBLE DUPLEX
	RECEPTACLE, DUPLEX ISOLATED GROUND
	RECEPTACLE, DOUBLE DUPLEX, ISOLATED GROUND
	RECEPTACLE, SIMPLEX TWIST LOCK, L5-15R, UNO
	RECEPTACLE, SIMPLEX TWIST LOCK, ISOLATED GROUND, L5-15R, UNO
	RECEPTACLE, DUPLEX TWIST LOCK, L5-15R, UNO
	RECEPTACLE, DUPLEX TWIST LOCK, ISOLATED GROUND, L5-15R, UNO
	RECEPTACLE, SPECIAL
	RECEPTACLE, SIMPLEX
	RECEPTACLE, PLUG-MOLD
J	JUNCTION BOX (WALL MOUNTED/CEILING MOUNTED)
T	THERMOSTAT (WALL MOUNTED/CEILING MOUNTED)
A	ALARM JUNCTION BOX, (WALL MOUNTED/CEILING MOUNTED)
R	ALARM JUNCTION BOX, FOR REMOTE TEST/RESET (WALL MOUNTED/CEILING MOUNTED)
S	SMOKE DETECTOR
	NON-FUSED DISCONNECT
	FUSED DISCONNECT
	EQUIPMENT CONNECTION POINT (PROVIDED WITH EQUIPMENT)
	CIRCUIT, CONCEALED IN WALLS OR CEILING, E INDICATES EXISTING WIRING
	CIRCUIT, CONCEALED IN SLAB FLOOR, E INDICATES EXISTING WIRING
	CIRCUIT, EXPOSED, E INDICATES EXISTING WIRING
	LOW VOLTAGE WIRING
	CONDUIT SLEEVE
	FLUSH MOUNTED PANELBOARD
	SURFACE MOUNTED PANELBOARD
	TELEPHONE / DATA BOX FOR ISD
	LOW VOLTAGE CABLE BOX FOR OTHER
	TELEPHONE, FLUSH FLOOR
	MOTOR
	TELEPOWER POLE
	PUSH BUTTON
B	BUZZER
SS	SAIL SWITCH JUNCTION BOX
	HORN / STROBE
DH	DOOR HOLD OPEN
TC	TIME CLOCK

ABBREVIATIONS

a, b, c	LOWER CASE LETTERS INDICATE SWITCHING CONFIGURATION
AFF	ABOVE FINISHED FLOOR
AFG	ABOVE FINISHED GRADE
C	CONDUIT
CCT	CIRCUIT
CF	CEILING FAN
[illegible]	[illegible]ASH WRAP
EC	ELECTRICAL CONTRACTOR
EF	EXHAUST FAN
ETR	EXISTING TO REMAIN
EWC	ELECTRIC WATER COOLER
G	GROUND
GFEP	GROUND FAULT EQUIPMENT PROTECTION
GFI	GROUND FAULT CIRCUIT INTERRUPTER
IG	ISOLATED GROUND
LCU	LIGHTING CONTROL UNIT
NTS	NOT TO SCALE
REC	REFRIGERATION ELECTRICAL CONTRACTOR
RC	REFRIGERATION CONTRACTOR
RH	RADIANT HEATER
SC	SECURITY CAMERA
TR	TAMPER RESISTANT
TYP	TYPICAL
UH	UNIT HEATER
UNO	UNLESS NOTED OTHERWISE
WH	WATER HEATER
WP	WEATHER PROOF
WR	WEATHER RESISTANT

10/10/2018 6:02:56 PM

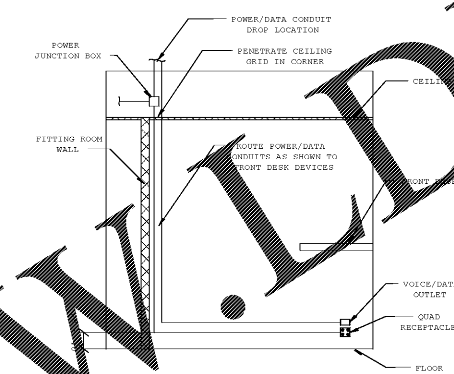

3 FITTING ROOM ELEVATION

12" = 1'-0"

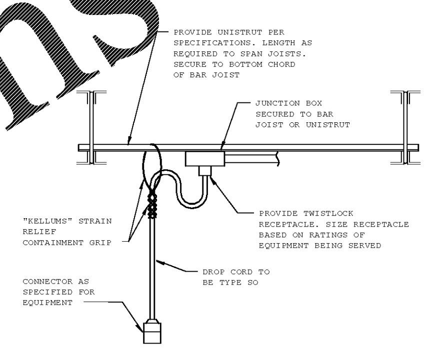

2 SUSPENDED DROP CORD

12" = 1'-0" 07/27/18

INSTALL FURNISHED POWER POLE. MOUNT JUNCTION BOX(ES) TO TOP SIDE OF BOTTOM CHORD OF BAR JOIST. PROVIDE 3/8" FLEXIBLE METAL WHIPS FROM JUNCTION BOX AND CONNECT AT TOP OF POWER POLE. CABLE WHIPS TO POWER POLE SHALL BE INSTALLED IN A NEAT AND WORKMAN-LIKE MANNER. ROUTE WHIPS TO TERMINATIONS ALONG UNISTRUT OR STRUCTURE AND SUPPORT EVERY 12" TO 24". EXCESS CABLE SHALL BE KEPT TO A MINIMUM AND TIGHTLY COILED AND ATTACHED TO UNISTRUT OR JOIST.

NO CONNECTION OF ANY KIND SHALL BE MADE TO JOIST WEB MEMBERS, JOIST BRIDGING, OR ROOF DECK. MAINTAIN MINIMUM 6" CLEARANCE FROM TOP OF POWER POLE TO ROOF DECK. JUNCTION BOXES AND RACEWAYS SHALL NOT BE MOUNTED WITHIN 1-1/2" OF DECK.

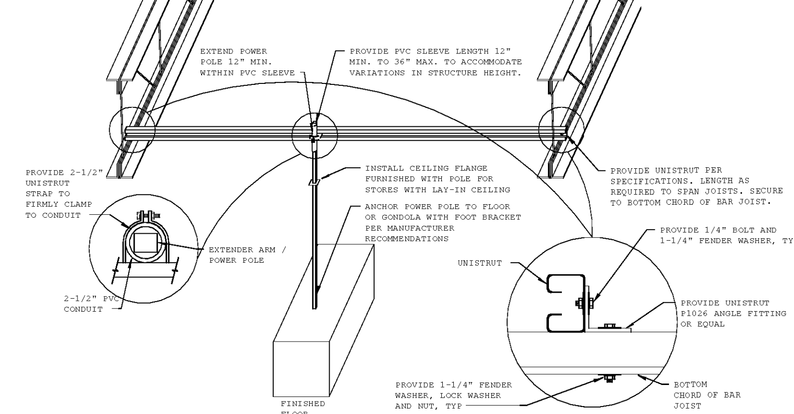

1 POWER POLE CONNECTION

12" = 1'-0" 07/27/18

GENERAL NOTES

05.25.18

1. FURNISH AND INSTALL ALL MATERIALS, EQUIPMENT, AND LABOR, FOR A COMPLETE INSTALLATION IN ALL RESPECTS, READY FOR INTENDED USE AND IN STRICT ACCORDANCE WITH NEC, NESC, STATE, AND LOCAL CODES, AND MANUFACTURER'S RECOMMENDATIONS. PAY ALL NECESSARY FEES AND PERMITS.
   A. NO CIRCUITRY SHALL BE ALLOWED TO BE ROUTED ACROSS THE ROOF OR THE EXTERIOR SIDE OF THE EXTERIOR WALLS.
   B. ALL EQUIPMENT SHALL BE UL LISTED WHERE APPLICABLE.
   C. ARRANGE ALL WORK TO MINIMIZE DISRUPTIONS TO STORE OPERATIONS. COORDINATE ALL DISRUPTIONS WITH WALMART CONSTRUCTION MANAGER AND STORE MANAGER.
   D. CONTRACTOR SHALL VERIFY ALL WALL FINISH THICKNESS BEFORE INSTALLING BOXES. FURNISH AND INSTALL EXTENDED BOXES OR BOX EXTENDERS WHERE REQUIRED.
   E. CONTRACTOR SHALL VERIFY THAT ALL AFFECTED PANELBOARDS HAVE CIRCUIT BREAKER KNOCKOUTS PROPERLY COVERED ANDTHAT ALL TRIM IS IN GOOD CONDITION, ALLOWING NO ACCESS TO LIVE PARTS.
2. PROVIDE SEALS AT RACEWAY PENETRATIONS AS FOLLOWS:
   A. FIRE RATED WALLS: SEAL PER SPECIFICATIONS FOR FIRE STOPPING.
   B. NEUTRALIZATION AREA: SEAL PER MECHANICAL DETAIL.
   C. FREEZER/COOLER BOXES: SEAL WITH EXPANDING FOAM SEALANT.
   D. EXTERIOR: REFER TO ARCHITECTURAL DOCUMENTS FOR SEALING REQUIREMENTS OF ALL EXTERIOR MOUNTED DEVICES, FIXTURES, ENCLOSURES, AND RACEWAY PENETRATIONS.
3. PROVIDE A SEPARATE EQUIPMENT GROUNDING CONDUCTOR (SIZE PER NEC) IN PVC TYPE CONDUIT, POWER AND LIGHTING CIRCUITS, ISOLATED GROUND CIRCUITS, OR AS SHOWN ON PLANS. CONDUIT SHALL BE SIZED PER NEC BASED ON THWN 600 VOLT COPPER SINGLE CONDUCTORS, PLUS THE EQUIPMENT GROUNDING CONDUCTOR.
4. WIRING DEVICES: DEVICE MOUNTING HEIGHTS ARE FROM FINISHED FLOOR TO CENTER OF OUTLET BOX UNLESS NOTED OTHERWISE ON PLANS. COORDINATE THE STANDARD MOUNTING HEIGHTS WITH MASONRY:
   A. SWITCHES +44"
   B. RECEPTACLES +20"
   C. VOICE/DATA +20"
5. WIRING SHALL INCLUDE FINAL CONNECTION TO ALL EQUIPMENT IN CONFORMANCE WITH EQUIPMENT SUPPLIER WIRING DIAGRAMS.
6. CONTRACTOR IS RESPONSIBLE FOR PROVIDING COMPLETE PANELBOARD IDENTIFICATION SCHEDULES FOR PANELBOARDS AFFECTED BY REMODEL.
7. NEW OVERCURRENT PROTECTIVE DEVICES INSTALLED IN EXISTING PANELBOARDS OR DISTRIBUTION BOARDS SHALL MATCH THE TYPE AND AIC RATING OF EXISTING OVERCURRENT PROTECTIVE DEVICES.
8. BRANCH CIRCUIT CONDUCTORS SHALL BE MINIMUM #12 AWG UNLESS NOTED OTHERWISE IN SCHEDULES. WHERE 20A BRANCH CIRCUITS HAVE #8 AND LARGER WIRE SPECIFIED, #10 AWG WIRE SHALL BE USED FOR THE FINAL CONNECTION (15-FT MAXIMUM).
9. WHERE BRANCH CIRCUITS ARE GROUPED, SIZE CONDUIT AND DERATE CURRENT CARRYING CONDUCTORS PER NEC.
10. PROVIDE UL LISTED HANDLE TIES ON ALL MULTIWIRE BRANCH CIRCUITS PER NEC REQUIREMENTS.
11. SUPPORTS FROM STRUCTURE: NO ATTACHMENT OF ANY TYPE SHALL BE MADE TO BRIDGING OR JOIST WEB MEMBERS. UTILIZE ONLY THE TOP AND BOTTOM CHORDS FOR SUPPORTING THE ELECTRICAL SYSTEM INSTALLATIONS.
12. DEVICES SHOWN ON COOLER/FREEZER PANELS SHALL BE SURFACE MOUNTED UNLESS NOTED OTHERWISE. SEAL DEVICES TO COOLER/FREEZER PANELS WITH SILICONE SEALANT.
13. SURFACE MOUNTED CONDUIT ON COOLER/FREEZER PANELS OR IN FOOD PREP AREAS SHALL BE INSTALLED WITH GALVANIZED 1/2" STANDOFF CONDUIT HANGERS TO ALLOW FOR CLEANING.
14. ONLY FEEDER CIRCUITS NOTED ON THE ONE LINE DIAGRAM AND BRANCHCIRCUITS NOTED BY LEGEND SHALL BE INSTALLED UNDER SLAB. ALL OTHER FEEDER AND BRANCH CIRCUITS SHALL BE INSTALLED OVERHEAD. PROVIDE EXTERIOR COATED GRC BENDS ON ALL CONDUIT RUNS THAT HAVE 45 DEGREE BENDS OR GREATER. REF SPECIFICATIONS.
15. SEISMIC ZONE REQUIREMENTS: PROVIDE EXPANSION COUPLINGS AND BRACING FOR ELECTRICAL EQUIPMENT AS REQUIRED BY LOCAL CODES.
16. EXISTING ELECTRICAL AND ALARM:
   A. WHERE DEMOLITION OR NEW CONSTRUCTION INTERRUPTS EXISTING ELECTRICAL CIRCUITS FEEDING EXISTING EQUIPMENT, DEVICES, OR LIGHTING TO REMAIN, BUT NOT SHOWN ON DRAWINGS, PROVIDE LABOR AND MATERIALS TO REWORK CIRCUITRY, AS REQUIRED, TO MAINTAIN EXISTING OPERATION.
   B. IF DEMOLITION OR NEW CONSTRUCTION WILL DISRUPT EXISTING UNDERGROUND SERVICES (ELECTRICAL, TELEPHONE, PARKING LOTLIGHTING CIRCUITRY, ETC.) PROVIDE ALL MATERIALS AND LABOR AS REQUIRED TO REROUTE, SLEEVE, OR OTHERWISE REWORK THESE SERVICES TO MAINTAIN THEIR EXISTING OPERATION.
   C. EXERCISE CAUTION AROUND ALARM AND SECURITY CABLES DURING DEMOLITION AND CONSTRUCTION. PROTECT ALARM AND SECURITY CABLES FROM ACCIDENTAL DAMAGE SO THAT SYSTEMS REMAIN OPERATIONAL AT ALL TIMES.
   D. DISPOSE OF ALL REMOVED MATERIALS, UNLESS OTHERWISE NOTED.
17. EXISTING ELECTRICAL DEMOLITION:
   A. GENERAL: REMOVE OR RELOCATE EXISTING ELECTRICAL EQUIPMENTCONDUIT, AND CONDUCTORS AS INDICATED ON THE DRAWINGS, OR ONLY AS REQUIRED BY DEMOLITION. REMOVE ALL PANELBOARDS, DISCONNECT SWITCHES, BOXES, RELAYS, TIME SWITCHES, LIGHTS, DEVICES, ETC., WHICH WILL NOT BE REUSED.
   B. SALES FLOOR: REMOVE UNUSED POWER DROP CONDUIT, CONDUCTORS AND RELATED DEVICES SERVING SALES AREA GONDOLAS BEING RELOCATED OR REMOVED. EXISTING CONDUIT AND CONDUCTORS MAY BE REUSED FOR NEW POWER DROPS WHERE SIZE, RATING, AND CONDITION MEET REQUIREMENTS INDICATED ON PLANS AND ALL U.L. RATINGS. REMOVE ALL UNUSED CONDUIT AND CONDUCTORS BACK TO POINT OF ORIGIN WHENEVER FEASIBLE AND RELABEL DEMOLISHED CIRCUITS AS "SPARE". PROVIDE HANDLE DEVICE TO LOCK "SPARE" CIRCUIT BREAKER IN THE "OFF" POSITION.
   C. CONDUIT AND WIRING TO BE ABANDONED IN CEILING SPACES AND OTHER NON-PUBLIC AREAS (I.E., THROUGH STOCKROOM AREA): CUT WIRING LOOSE AND REMOVE FROM RACEWAY(S), LEAVING RACEWAY(S) IN PLACE. CONDUIT TO BE ABANDONED IN WALLS OR FLOORS SHALL BE REMOVED BACK TO FINISHED SURFACE AND CAPPED INSIDE. REPAIR SURFACE(S) TO MATCH ADJACENT.
   D. ALL CIRCUIT BREAKERS SERVING BRANCH CIRCUITS TO BE ABANDONED OR REMOVED SHALL REMAIN IN RESPECTIVE PANELBOARD FOR FUTURE USE, UNLESS NOTED OTHERWISE ON DRAWINGS. PROVIDE HANDLE DEVICE TO LOCK "SPARE" CIRCUIT BREAKER IN THE "OFF" POSITION.
   E. DEMOLISHED FLUORESCENT LIGHT FIXTURES: REFER TO SELECTIVE SITE DEMOLITION SPECIFICATION FOR DISPOSAL OF LIGHT FIXTURE.
   F. BUILDING COMPONENTS ABANDONED BY THE SCOPE OF WORK SHALL BE SECURED TO PREVENT FALLING, LOOSENING, OR CREATING DAMAGE OF ANY KIND IN THE FUTURE.
18. DATA AND PHONE CONDUIT INSTALLATION MILESTONE DATE: ALL RACEWAY AND CONDUIT SLEEVES FOR DATA AND PHONE CABLING TO BE INSTALLED 3 WEEKS PRIOR TO CONTRACT SUBSTANTIAL COMPLETION DATE.
19. ETHERNET CABLE:
   A. FURNISH AND INSTALL JUNCTION BOXES AS SHOWN ON PLANS. PROVIDE CONDUIT AS REQUIRED BY LOCAL CODES AND/OR ORDINANCES.
   B. ETHERNET CABLE IS FURNISHED BY OTHERS.
   C. ELECTRICAL CONTRACTOR SHALL INSTALL CABLE IN POWER POLES.
   D. ELECTRICAL CONTRACTOR SHALL INSTALL OTHER CABLE AS DIRECTED BY WALMART CONSTRUCTION MANAGER.

EXISTING CONDITIONS WERE TAKEN FROM ORIGINAL DRAWINGS AND MAY NOT REFLECT EXACT "AS-BUILT" CONDITIONS. CONTRACTOR SHALL FIELD VERIFY ALL EXISTING CONDITIONS PRIOR TO SUBMITTING FINAL BIDS. CONTRACTOR SHALL CAREFULLY COORDINATE NEW WORK AND DEMOLITION WITH ALL OTHER DISCIPLINES AND EXISTING CONDITIONS.

EACH SUBCONTRACTOR IS RESPONSIBLE FOR HAVING A THOROUGH KNOWLEDGE OF ALL DRAWINGS AND SPECIFICATIONS IN THEIR RELATED FIELD. THE FAILURE TO ACQUAINT THEMSELF WITH THIS KNOWLEDGE DOES NOT RELIEVE THE RESPONSIBILITY OF PERFORMING THE WORK PROPERLY. NO ADDITIONAL COMPENSATION SHALL BE ALLOWED BECAUSE OF CONDITIONS THAT OCCUR DUE TO FAILURE TO FAMILIARIZE WORKERS WITH THIS KNOWLEDGE.

Cuhaci & Peterson Architects Engineers Planners
1925 Prospect Ave. Orlando, FL 32814
P (407) 661-9100
F (407) 661-9101

STIPULATION FOR REUSE
THIS DRAWING WAS PREPARED FOR USE ON A SPECIFIC SITE AT: JESUP, GA CONTEMPORANEOUSLY WITH ITS ISSUE DATE ON 10/05/18 SUITABLE FOR USE A DIFFERENT PROJECT SITE OR AT A LATER TIME. USE OF THIS DRAWING FOR REFERENCE OR EXAMPLE ON ANOTHER PROJECT REQUIRES THE SERVICES OF PROPERLY LICENSED ARCHITECTS AND ENGINEERS. REPRODUCTION OF THIS DRAWING FOR REUSE ON ANOTHER PROJECT IS NOT AUTHORIZED AND MAY BE CONTRARY TO THE LAW.

CONSULTANTS

Walmart
JESUP, GA
STORE NO: 2630
JOB NUMBER: 2180278 PROTO: 139

ISSUE BLOCK

CHECKED BY:	JPM
DRAWN BY:	MD
PROTO CYCLE:	07/27/18
DOCUMENT DATE:	10/05/18

NOT FOR CONSTRUCTION

ELECTRICAL DETAILS

SHEET: E3