THIS SHEET IS FOR REFERENCE ONLY. REFER TO MANUFACTURER 'S INSTALLATION DRAWINGS AND SPECIFICATIONS FOR ADDITIONAL INFORMATION AND SPECIFIC DETAILS ON THE MODULAR WALLS AND COMPONENTS.

ALL WALL PANELS AND CEILING PANELS FURNISHED BY OWNER, GC INSTALLED.

SALES SIDE OF PANELS ARE PRE LAMINATED WITH GYPSUM, GC TO TAPE, MUD, AND PAINT. INTERIOR SIDES OF PANELS ARE PREFINISHED, GC TO CAULK SEAMS WHERE MODULAR WALLS MEET AT INSIDE OF PHARMACY AND HEALTH SERVICES ROOM

FOR MODULAR WALL PANEL COORDINATION CONTACT : WAINES, JONES & CADBURY. CUSTOMER SERVICE (800) 459-7099, MODULAR@WJCINC.COM FOR MODULAR WALL PANEL COORDINATION

SHEET NOTES

1. GC TO CAULK SEAMS WHERE MODULAR WALL PANELS MEET ON INSIDE OF PHARMACY AND HEALTH SERVICES ROOM.
2. PAINT ALL EXPOSED CONDUIT TO MATCH ADJACENT WALLS
3. THIS PROTOTYPE USES PRE-WIRED MODULAR WALLS FOR THE NEW FRONT COUNTER AND HEALTH SERVICES ROOM. COORDINATE WITH THE LOCAL JURISDICTION ON FINAL INSPECTIONS.
4. REFER TO MANUFACTURER 'S INSTALLATION DRAWINGS AND SPECIFICATIONS FOR ADDITIONAL INFORMATION AND SPECIFIC DETAILS ON THE MODULAR WALLS AND C

PANEL DESIGNATION INDICATOR KEY PLAN

MP1 — PANEL DESIGNATION
3 — SEQUENCE NUMBER OF ASSEMBLY

THE ORDER OF ASSEMBLY IS BASED ON PROTOTYPICAL SITUATIONS AND IS FOR INFORMATIONAL PURPOSES, REFER TO THE MANUFACTURERS INSTRUCTIONS SPECIFIC TO THE JOB FOR ACTUAL INSTALLATION ORDER

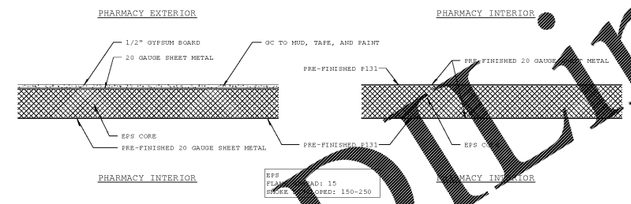

EPS
FIRE LOAD: 15
SMOKE DEVELOPED: 150-250

4 MODULAR WALL PANEL TYPE
1 1/2" = 1'-0"

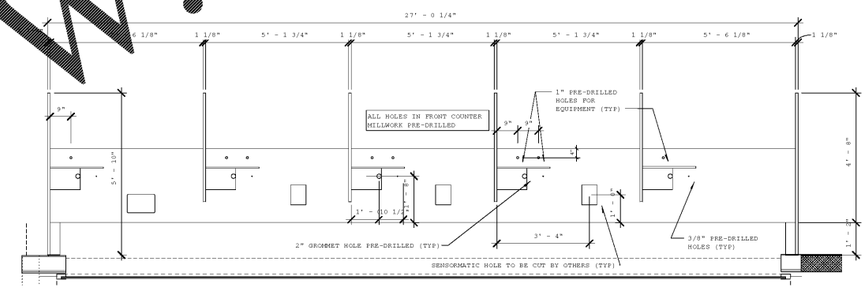

3 COUNTER HOLE PLAN
1/2" = 1'-0"

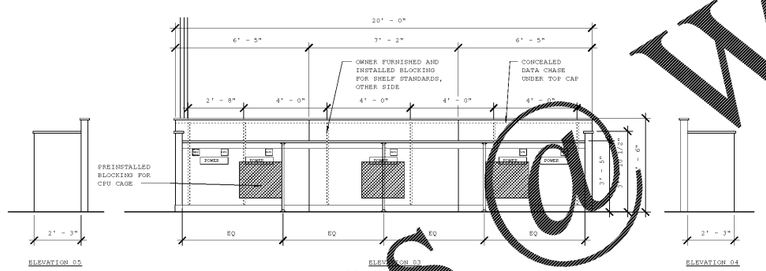

GC TO VERIFY AND COORDINATE WITH THE PANEL MANUFACTURER THE BOTTOM OF JOIST HEIGHT, MODULAR PANELS TO SUPPORT THE EXISTING CEILING. NOTE THE CARPET THICKNESS

SUGGESTED MECHANICAL AND LIGHT LOCATIONS. MANUFACTURER TO COORDINATE ACTUAL LOCATION WITH STRUCTURAL COMPONENTS

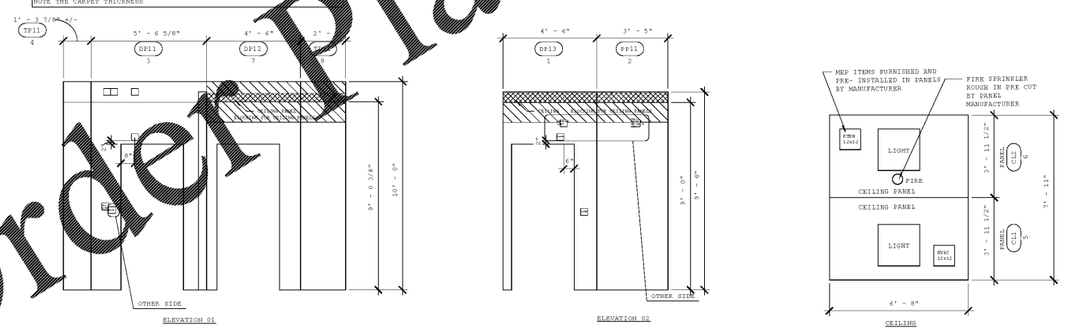

2 MODULAR PANEL ELEVATIONS
3/8" = 1'-0"

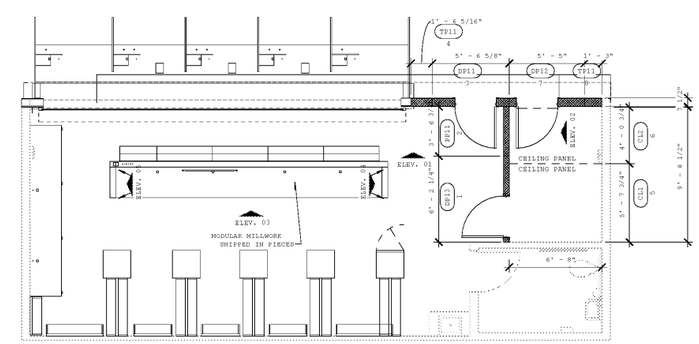

1 MODULAR PANEL PLAN
1/4" = 1'-0"

1950 Prospect Ave
Cleveland, OH 44115
P (877) 244-3500
F (877) 244-3501
www.jfp.com
JFP ARCHITECTS

CERTIFICATION FOR BIDDING

THIS DRAWING WAS PREPARED FOR THE PURPOSE OF OBTAINING BIDS FOR CONSTRUCTION IN CONFORMANCE WITH ITS SIGNED AND SEALED CERTIFICATION. THE ARCHITECT ASSUMES NO RESPONSIBILITY FOR THE USE OF THIS DRAWING FOR A CLIENT OTHER THAN THE CLIENT FOR WHOM THE PROJECT REFERRED TO HEREIN IS INTENDED. ANY REPRODUCTION OF THIS DRAWING, REPRODUCTION OF THE INFORMATION CONTAINED HEREIN, OR USE OF THE INFORMATION CONTAINED HEREIN IS PROHIBITED WITHOUT THE WRITTEN CONSENT OF THE ARCHITECT.

CONSULTANTS

Walmart

JESUP, GA

STORE NO: 2630

TOLERANCE | REVISION | SIZE

JOB NUMBER:

ISSUE BLOCK

CHECKED BY:	RD
DRAWN BY:	SM
PROTO CYCLE:	08/31/11
DOCUMENT DATE:	10/05/11

NOT FOR CONSTRUCTION

PANEL PLAN

SHEET:
PHM4

Order Plans @ www.LDLine.com