Order Plans @ WWW.LDILine.com

FINISH KEY

REF SPECIFICATIONS FOR EXACT COLORS REQUIRED

MARK	FINISH	COLOR	DESCRIPTION
ACT1	ACOUSTICAL CEILING TILE	WHITE	24"x48"
ACT2	ACOUSTICAL CEILING TILE	WHITE	24"x48" VINYL FACED NON-PERFORATED
ACT3	ACOUSTICAL CEILING TILE	WHITE	24"x48"
ACT4	ACOUSTICAL CEILING TILE	WHITE	24"x48"
ACTG	ACOUSTICAL CEILING GRID	WHITE	
B4	RESILIENT BASE	BLACK	4"
B6	PLASTIC BASE	BLACK	6"x1/4"
B9	PLASTIC BASE	BLACK	4"x1/4"
B10	PLASTIC BASE OUTSIDE CORNER	BLACK	
C1	CUSHION BACK TILE CARPET		
C3	CUSHION BACK TILE CARPET	CHARCOAL	
CC	CONCRETE CURB		
CT2	ENTRY TILE	RED	12" x 24" x 3/8"
CT9	ACCENT TILE	ADOBE SUNSET	
CT13	PORCELAIN FLOOR TILE	BROWN	
CT18	SANITARY FLOOR MOLDING	SUNSET	
CT19	PORCELAIN WALL TILE	IVORY	5"
CT43	PORCELAIN WALL TILE	BEIGE	12" x 12" x 3/8"
CT44	PORCELAIN FLOOR TILE	GRAY	12" x 12" x 3/8"
CT45	WALL TILE	WHITE	4" x 8" x 3/8"
CT46	PORCELAIN WALL TILE	GREEN	4" x 8" x 3/8"
CT47	WALL TILE	BLUE	4" x 8" x 3/8"
CT48	FLOOR TILE	TAUPE GRADIENT	12" x 24" x 3/8"
CT48A	COVE BASE	TAUPE GRADIENT	6" x 12" x 3/8"
DB5	DURA-TUFF BASE	BLACK	5"
DB10	DURA-TUFF BASE	BLACK	10"
EC	EXPOSED CONCRETE	CLEAR SEALER	
ETR	EXISTING TO REMAIN		
FRP1	FIBERGLASS REINFORCED PLASTIC	WHITE	FRP WALL PANEL
FRP2	FIBERGLASS REINFORCED PLASTIC	BEIGE	FRP WALL PANEL
FRP5	FIBERGLASS REINFORCED PLASTIC	ALMOND	FRP WALL PANEL
G1	GROUT	DARK GRAY	
G2	GROUT	DARK GRAY	
G3	GROUT	LIGHT TAN	
G4	GROUT	GRAY	
G7	GROUT	BROWN	
G9	GROUT	LT GRAY	
G13	GROUT	BEIGE	
HRC1	HEAT RESISTANT COATING	TO MATCH COPPER BROWN BY BERRIDGE	
HRC4	HEAT RESISTANT COATING	MATCH SW#7019 "GAUNTLET GRAY"	
ICC	INTEGRAL COLORED CONCRETE	BROWN	
LVT1	PLANK FLOORING	DARK WOODGRAIN	
P3	PAINT	"LOYAL BLUE" #6510	
P5	PAINT	"SAFETY YELLOW" OSHA STANDARD	
P8	PAINT	"PURE WHITE" # 7005	
P14	PAINT	"GOLDENROD" # 6677	
P15	PAINT	"SUMMIT GRAY" #7669	
P16	PAINT	"SOFTWARE" #7074	
P21	PAINT	"SAFETY RED" #4081	
P33	PAINT	"DOVER WHITE" #6385	
P36	PAINT	"DOMINO" #6989	
P40	PAINT	"GARDENIA" #6665	
P49	PAINT	"GAUNTLET GRAY" #7019	
P57	PAINT	"ROYCROFT PEWTER" #2848	
P59	PAINT	"CLASSIC FRENCH GRAY" #0077	
P76	PAINT	"MEDIUM WALMART BLUE" #076	
P76U	PAINT	"MEDIUM WALMART BLUE" #076 (URETHANE)	
P81	PAINT	"TRICORN BLACK" #6258	
P83	PAINT	"COBBLE BROWN" #6082	
P93	PAINT	"TAMARIND" #7538	
P94	PAINT	"EXTERIOR DROMEDARY CAMEL" #7694 (EXT)	
P100	PAINT	"NOTABLE HUE" #6521	
P102	PAINT	"BEACH HOUSE" #7518	
P107	PAINT	"STRAW HARVEST" #7698	
P112	PAINT	"BUTTERFIELD" #6676	
P124	PAINT	"MEADOWLARK" #7522	
P126	PAINT	"KNOCKOUT ORANGE" #6885	
P126U	PAINT	"KNOCKOUT ORANGE" #6885 (URETHANE)	
P130	PAINT	"OUTRAGEOUS GREEN" #6922	
P130U	PAINT	"OUTRAGEOUS GREEN" #6922 (URETHANE)	
P131	PAINT	"WHITE FLOUR" #7102	
P134	PAINT	"REPOSE GRAY" #7015	
P135	PAINT	"DORIAN GRAY" #7017	
P139	PAINT	"MELANGE GREEN" #6710	
P140	PAINT	"SNOWBOUND" #7004	
P152	PAINT	NM BRAND GREEN - PANTONE 368C	
P159	PAINT	"CASA BLANCA" #7571	
P162	PAINT	"PEPPERCORN" #7674	
P163	PAINT	"TURQUISH" #6939	
P164	PAINT	"ESSENTIAL GRAY" #6002	
P166	PAINT	"MARINER" #6766	
P204	PAINT	"FESTOON AQUA" #0019	
PF4	LEAD-COTE	METALLIC	
PL4	PLASTIC LAMINATE	MAPLE	
PL6	PLASTIC LAMINATE	LIGHT TAN	
PL11	PLASTIC LAMINATE	NORTH SEA GRAY	
PL12	PLASTIC LAMINATE	MYSTED ZEPHYR	
PL15	PLASTIC LAMINATE	BROWN	
PL20	PLASTIC LAMINATE	TAN	
PL22	PLASTIC LAMINATE	DEEPSTAR AGATE	
PL27	PLASTIC LAMINATE	GREEN	
PL28	PLASTIC LAMINATE	ALOE	
PL30	PLASTIC LAMINATE	"STEEL MESH" WILSONART 4879	
PL31	PLASTIC LAMINATE	"GREY" WILSONART 1500-60	
PL32	PLASTIC LAMINATE	"VISION VAVA" NEVAMAR VA2002	
PS1	PROTECTIVE SURFACE	WALMART MED BLUE IMPACT SPECIALTIES	
PS3	PROTECTIVE SURFACE	BRUSHED SURFACING	
PS4	PROTECTIVE SURFACE	"GLOWING EMBER" IMPACT SPECIALTIES	
PS5	PROTECTIVE SURFACE	"FRESH LINEN" IMPACT SPEICALTIES	
PS6	PROTECTIVE SURFACE	YELLOW	
PS7	PROTECTIVE SURFACE	"GRAY PATTERN"	
PVC1	PVC PLANK FLOORING	WOODGRAIN	
QT3	QUARRY TILE	GRAY	6"x6" ABRASIVE
QT31	QUARRY TILE	RED	6"x6" ABRASIVE
RCS1	RECYCLED CERAMIC SOLID SURFACE	GRENITE "BIRCH PRADA"	
RF1	RESINOUS FLOOR	GRAY	
RF2	RESINOUS FLOOR	RED	
RRF1	RECYCLED RUBBER FLOORING	BLACK/BLUE	
RRF2	RECYCLED RUBBER FLOORING	BLACK/GREEN	
SCB1	SANITARY COVE BASE	RED	8" H ANTIMICROBIAL PLASTIC FOR QT
SCB2	SANITARY COVE BASE	GRAY	8" H ANTIMICROBIAL PLASTIC FOR QT
SCB4	SANITARY COVE BASE	RED	8" H ANTIMICROBIAL PLASTIC
SCB5	SANITARY COVE BASE	GRAY	8" H ANTIMICROBIAL PLASTIC
SCB6	SANITARY COVE BASE	TAN	
SS	STAINLESS STEEL		
SST1	SOLID SURFACE		
TC	TEXTURED CONCRETE		
TS1	ALUMINUM TRANSITION STRIP		
VCT9	VINYL COMPOSITION TILE	WHITE	12"x12"x1/8"
VCT11	VINYL COMPOSITION TILE	BEIGE	12"x12"x1/8"
VCT12	VINYL COMPOSITION TILE	TAN	12"x12"x1/8"
WB	2x8 WOOD BASE		
WB10	2x10 WOOD BASE		
WG	PLASTIC WALL GUARD	BLACK OR GRAY	

DOOR SCHEDULE NOTES

1. REPLACE BUTTS OR HINGES. REF SPEC.
2. REPLACE ALARM OR EXIT DEVICE. REF SPEC.
3. REPLACE LATCH OR LOCK SET, REF SPEC.
4. REPLACE PUSH AND/OR PULL, REF SPEC.
5. INSTALL/REPLACE AUTOMATIC CLOSER, REF SPEC.
6. REMOVE DOOR CLOSER. PATCH AS NEEDED.
7. REPLACE ARMOR PLATE AND/OR KICKPLATE.
8. REPLACE STOP, HOLDER, OR ELECTROMAGNETIC DOOR HOLDER, REF SPEC.
9. REPLACE THRESHOLD, REF SPEC.
10. INSTALL/REPLACE CONTINUOUS GEARED HINGE, REF SPEC.
11. REPLACE DOOR COORDINATOR, REF SPEC.
12. REPLACE ELECTROMAGNETIC LOCK, REF SPEC.
13. REPLACE LOCK GUARD, REF SPEC.
14. REPLACE ONE-WAY VIEWER, REF SPEC.
15. INSTALL 5"X20" WINDOW IN DOOR.
16. INSTALL/REPLACE FLEXIBLE STRIP CURTAIN
17. INSTALL SECTIONAL DOOR TRACK RETURN AT MAXIMUM HEIGHT AND AS CLOSE TO ROOF STRUCTURE AS ALLOWABLE BY MANUFACTURER.
18. REPLACE DAMAGED SECTIONAL DOOR PANELS.
19. REPAIR DAMAGED EXTERIOR WALL CORNERS AT ROLL DOOR OPENINGS.
20. FULLY GASKETED FOR NEUTRALIZATION.
21. NOT USED
22. PROVIDE 1" CLEARANCE BETWEEN EDGE OF STRIKE SIDE OF DOOR AND ADJACENT CASEWORK.
23. NOT USED
24. ENSURE GATE IS OPERATIONAL AND LATCHES. REPAIR GATE TO PROPER WORKING CONDITION IF NEEDED.
25. COORDINATE INSTALLATION OF SIGNAGE WITH DOOR MANUFACTURER: 1" HIGH LETTERS IN CONTRASTING COLORS TO BACKGROUND, TEXT TO READ "THIS DOOR TO REMAIN UNLOCKED WHEN BUILDING IS OCCUPIED"
26. REMOVE EXISTING DOOR AND HARDWARE. EXISTING FRAME TO REMAIN. INSTALL HINGE FILLER PLATE AND STRIKE FILLER PLATE IN HOLLOW METAL FRAME.
27. FLEXIBLE TRAFFIC DOOR COLOR TO BE BLACK. PAINT DOOR FRAME P36. DO NOT PAINT STAINLESS STEEL FRAMES.
28. NOT USED
29. INSTALL HINGE FILLER PLATE PRIOR TO INSTALLATION OF CONTINUOUS HINGE.
30. PROVIDE VENDOR WITH FIELD VERIFIED DIMENSION OF CLEAR WIDTH AFTER REFRIGERATED CASES HAVE BEEN INSTALLED. DOOR COLOR TO BE BLACK.
31. SHELF ON DOOR TO BE STRIPPED, CLEANED, AND REFINISHED.
32. 31 PRE-INSTALLED FULL FROST W/ CUT IN MORTAL/PETSAL LOGO BY NGS-PRODUCT #NGS-WRX-FR
33. 32 PRE-INSTALLED HALF FROSTED BY NGS-PRODUCT #NGS-HSR-HF
34. 33DOOR FRAMES ARE PRE-FINISHED AND INSTALLED IN PRE-MANUFACTURED WALL, GC TO INSTALL OWNER PROVIDED DOOR SLABS.
35. PRE-INSTALLED FULL FROST BY NGS-PRODUCT #NGS-HSR-FF

GENERAL DOOR NOTES

1. INSTALL/REPLACE ALL WEATHER STRIPPING AND GASKETS AT ALL EXTERIOR HOLLOW METAL DOORS. REF SPEC
2. ALL DOORS SCHEDULED AS NEW ARE TO RECEIVE COMPLETE NEW HARDWARE SETS AS LISTED IN SPECIFICATIONS.
3. AT INTERIOR HOLLOW METAL DOORS TO REMAIN, INSTALL/REPLACE REINFORCING PIVOT WHERE MISSING OR BROKEN. REF SPEC
4. ALL UL RATED DOORS TO RECEIVE PAINT MUST HAVE UL LABELS IN PLAIN SIGHT AND BE LEGIBLE. IF EXISTING LABELS HAVE BEEN PAINTED OVER, TEST PAINT REMOVAL IN ONE LOCATION. IF PAINT REMOVAL DAMAGES UL LABEL, CONTACT CM FOR FURTHER DIRECTION. IF TEST UL LABEL IS NOT DAMAGED FROM PAINT REMOVAL, REMOVE PAINT FROM ALL UL LABELS.
5. REFERENCE ELEVATIONS ON A2 FOR EXTERIOR DOOR COLORS
6. SCHEDULED WIDTH AND HEIGHT INDICATE FINISHED OPENING SIZE AT ALL OVERHEAD AND COILING DOOR LOCATIONS
7. SCHEDULED WIDTH AND HEIGHT INDICATE ROUGH OPENING SIZE AT ALL AUTOMATIC SLIDING DOOR LOCATIONS.
8. INSTALL/REPLACE DRIP CAP AT ALL NEW EXTERIOR DOORS AND EXTERIOR DOORS TO BE REPLACED.
9. INSTALL/REPLACE ALL MISSING OR DAMAGED DOOR SILENCERS.
10. AT ALL DOORS IMMEDIATELY ADJACENT TO CUSTOMER AREAS, ADJUST EXISTING DOOR HARDWARE TO PROPER WORKING CONDITION.
11. UNLESS NOTED OTHERWISE, GENERAL NOTES APPLY TO ALL DOORS IN THE STORE, NOT ONLY THOSE IN THE DOOR SCHEDULE.

GENERAL FINISH NOTES

1. PAINT ALL METAL DOOR FRAMES VISIBLE TO CUSTOMER (EXCEPT DOORS IN CMU WALLS) WITH EPOXY PAINT.
2. PAINT ALL HM DOORS AND FRAMES LOCATED IN NEWLY PAINTED WALLS AS INDICATED:
   - DOORS AND FRAMES SHALL BE PAINTED P162 UNO
   - PAINT NEW DOORS P162 IF ADJACENT WALLS ARE UNFINISHED UNO
3. AT ROOMS SCHEDULED TO RECEIVE NEW PAINT: OMIT PAINT AT WALLS CONCEALED BY HALF-GONDOLAS, WALL STANDARDS OR WAREHOUSE RACKING WITH PEG-BOARD BACKING. AT WALL STANDARDS, GONDOLAS AND WAREHOUSE RACKING WITHOUT PEG-BOARD BACKING, PAINT WALL TO BASE. REF 2 - A3
4. INSTALL MISSING CEILING TILES TO MATCH ADJACENT TILES IN ALL ROOMS WHERE LAY-IN CEILING TILE IS ETR.
5. AT EXPOSED PAINTED STRUCTURE OR DECK, PAINT NEW CONDUIT, DUCTWORK AND FIRE SPRINKLER PIPING (FIRE SPRINKLER HEADS TO REMAIN UNPAINTED) TO MATCH ADJACENT STRUCTURE OR DECK.
6. FOR PROTECTIVE WALL SURFACING WAINSCOT, INSTALL OUTSIDE CORNER TRIM, DO NOT INSTALL ON BLOCK WALLS, REFERENCE SPECIFICATIONS.
7. WHEN PIECE REPLACING CEILING TILE GC TO MATCH NEW TILE TO ADJACENT SURROUNDING CEILING TILE.
8. WHERE NEW PROTECTIVE SURFACING WAINSCOT IS TO BE INSTALLED, REMOVE EXISTING LAMINATE AND/OR FINISHES TO BASE SUBSTRATE PRIOR TO INSTALLATION OF NEW. INSTALLATION OF NEW PROTECTIVE SURFACING OVER EXISTING IS NOT ACCEPTABLE. NO EXCEPTIONS.
9. PROPERLY SEAL ALL EXISTING AND NEW PENETRATIONS IN FIRE RATED WALLS TO MAINTAIN FIRE RATING.
10. WHEN INSTALLING NEW OR REPLACING FRP, INSTALL NEW WALL BASE FULL WIDTH OF PANEL(S) TO MATCH EXISTING.
11. PATCH AND REPAIR ALL GYPSUM BOARD WALLS AND CEILINGS PRIOR TO PAINTING

MATERIAL KEY

MARK	DESCRIPTION
A	CONCRETE
B	GLASS AND ALUMINUM FRAME
C	SMOOTH FACE CMU
D	SPLIT FACE CMU
E	CHAIN LINK
ETR	EXISTING TO REMAIN
F	EXPOSED STRUCTURE
G	GYPSUM BOARD
H	METAL SOFFIT
J	SHADE CLOTH
L	PLYWOOD
M	ORNAMENTAL FENCE
N	COOLER/FREEZER PANEL
P	TRANSLUCENT WALL PANEL
Q	FIBERGLASS ROOF PANELS

MATERIAL KEY

MARK	DESCRIPTION
ACRYL	ACRYLIC
AL	ALUMINUM LINK
ALUM	ALUMINUM
CL	CHAIN LINK
HM-STL	HOLLOW METAL-STEEL
OM	ORNAMENTAL METAL
PLAST	PLASTIC
STL	STEEL
STL-P	STEEL PIPE
STL-BP	STEEL BENT PLATE
TEMP	TEMPERED

DOOR AND FRAME SCHEDULE

MARK	ROOM NAME	DOOR NEW/ETR	DOOR TYPE	DOOR MAT	DOOR QTY	DOOR W	DOOR H	GLASS	FRAME NEW/ETR	FRAME TYPE	FRAME MAT	DETAIL HEAD	DETAIL JAMB	DETAIL THRESH	FIRE RATING (MIN)	NOTES	MARK
100U	SALES	NEW	F	HM-STL	2	3' - 0"	7' - 0"	---	ETR	4	HM-STL	---	---	---	---	---	100U
126B	SEASONAL SHOP	NEW	F	HM-STL	1	3' - 0"	7' - 0"	---	ETR	2	HM-STL	---	---	---	---	---	126B
150D	ALCOVE	NEW	E	PLASTIC	PR	3' - 0"	9' - 0"	ACRYLIC	ETR	1	STL-BP	---	---	---	---	---	150D
177A	ASSISTANT MANAGEMENT	NEW	F	HM-STL	1	3' - 0"	7' - 0"	---	NEW	1	HM-STL	3	4	---	---	---	177A
180A	STOCKROOM	NEW	E	PLASTIC	PR	4' - 0"	7' - 0"	ACRYLIC	ETR	1	STL-BP	---	---	---	---	---	180A
180B	GM STOCKROOM	NEW	F	HM-STL	1	3' - 0"	7' - 0"	---	ETR	2	HM-STL	---	---	---	---	---	180B
180D	GM STOCKROOM	NEW	F	HM-STL	1	3' - 0"	7' - 0"	---	ETR	2	HM-STL	---	---	---	---	---	180D
183A	MANAGEMENT OFFICE	ETR	F	HM-STL	1	3' - 0"	7' - 0"	---	ETR	1	HM-STL	---	---	---	---	3	183A
300G	PHARMACY	NEW	G1	HM-STL	1	3' - 0"	7' - 0"	TEMPERED	NEW	1	HM-STL	---	---	---	---	31, 33	300G
300H	PHARMACY	NEW	U1	ALUM	1	26' - 5"	8' - 2 1/2"	---	NEW	---	ALUM	1-PHM2	---	---	---	---	300H
303B	HEALTH SERVICE	NEW	G1	HM-STL	1	3' - 0"	7' - 0"	TEMPERED	NEW	1	HM-STL	---	---	---	---	33, [illegible]	[illegible]
303C	HEALTH SERVICE	NEW	G1	HM-STL	1	3' - 0"	7' - 0"	TEMPERED	NEW	1	HM-STL	---	---	---	---	32, 33	[illegible]
600A	TIRE & LUBE MOUNTING AREA	NEW	G	HM-STL	1	3' - 0"	7' - 0"	TEMPERED	ETR	2	HM-STL	---	---	---	---	[illegible]	600A
600B	TIRE & LUBE MOUNTING AREA	NEW	G	HM-STL	1	3' - 0"	7' - 0"	TEMPERED	ETR	2	HM-STL	---	---	---	[illegible]	[illegible]	600B
600S	TIRE & LUBE MOUNTING AREA	NEW	V	CL	1	2' - 7"	4' - 0"	---	ETR	---	STL-P	---	---	---	---	---	600S
800A	MONEYCENTER	NEW	Y	PLASTIC	1	4' - 6"	3' - 2"	---	---	---	---	---	---	---	---	---	800A
903A	DELI UTILITY	NEW	E	PLASTIC	1	3' - 0"	7' - 0"	ACRYLIC	ETR	1	STL-BP	---	---	---	[illegible]	[illegible]	903A
908D	BAKERY UTILITY	NEW	E	PLASTIC	PR	3' - 0"	7' - 0"	ACRYLIC	ETR	1	STL-BP	---	---	---	[illegible]	---	908D
918A	CORRIDOR	NEW	F	HM-STL	2	3' - 0"	7' - 0"	---	ETR	4	HM-STL	---	---	---	[illegible]	---	918A
926A	HALLWAY	NEW	F	HM-STL	2	3' - 0"	7' - 0"	---	ETR	4	HM-STL	---	---	---	---	---	926A

CEILING ALLOWANCE SCHEDULE SC

	CEILING TILE REPLACEMENT AREAS	QUANTITY OF TILES
NON SALES AREA	OFFICES (CASH, COUNT, MANAGER'S OFFICE, TRAINING, MANAGEMENT, ASST. MANAGERS, UPC/INVOICING, ALCOVE)	480
	CUSTOMER SERVICE (INCLUDING RETURN STORAGE)	20 (revision 1)
	VISION CENTER (SALES, WAITING AND OFFICES / EXAM ROOMS)	176
	ACC CUSTOMER SERVICE (AND WAITING AREA)	95
	BREAKROOM	108
	GROCERY (PROVIDE QUANTITY OF TILES TO BE REPLACED USING EXISTING REFLECTED CEILING PLANS AND OR LIGHTING PLANS)	REPLACE ALL CUSTOMER VISIBLE TILES IN SERVICE AREAS I.E. DELI, BAKERY, SEAFOOD. (2 TILES EACH IN PREP AREAS)
	PHARMACY	FULL TILE REPLACEMENT

INTERIOR NON-LOAD BEARING PARTITION HEADER SCHEDULE

HEADER LENGTH	HEADER MEMBERS	HEADER TRACKS	JAMB STUDS
UP TO 4'-0"	(2) C3 5/8x1 1/4"x20 GA	(2) C3 5/8x20 GA	(2) C3 5/8x1 1/4"x20 GA
UP TO 10'-0"	(2) C6x1 5/8"x18 GA	(2) C6x18 GA	(2) C6x1 5/8"x18 GA
14'-0"	(2) C8x1 5/8"x18 GA	(2) C6x18 GA	(2) C6x1 5/8"x18 GA
18'-0"	(2) C8x1 5/8"x16 GA	(2) C6x16 GA	(2) C6x1 5/8"x16 GA
20'-0"	(2) C10x1 5/8"x16 GA	(2) C6x16 GA	(2) C6x1 5/8"x16 GA
24'-0"	(2) C12x1 5/8"x16 GA	(2) C6x16 GA	(2) C6x1 5/8"x16 GA

NOTES:

1. MAX WALL HEIGHT ABOVE HEADER ASSEMBLY IS 14'-9".
2. SPLICING OF HEADER AND JAMB MEMBERS IS NOT PERMITTED.
3. MAX SPAN FOR OPENINGS TO RECEIVE INFILL BELOW THE HEADER IS 19'-0".
4. JAMBS NOT TO DECK ARE TO BE BRACED IN ACCORDANCE WITH THE PARTITION BRACING DETAILS. 3 5/8" JAMBS BEYOND 13'-4" ARE TO BE BRACED ABOVE THE OPENING AND SUCH THAT THE MAXIMUM UNBRACED LENGTH IS NOT EXCEEDED
5. FRAMING MEMBERS ARE NOT SIZED FOR VERTICAL LOAD OTHER THAN THAT OF THE PORTION OF WALL ABOVE THE OPENING.

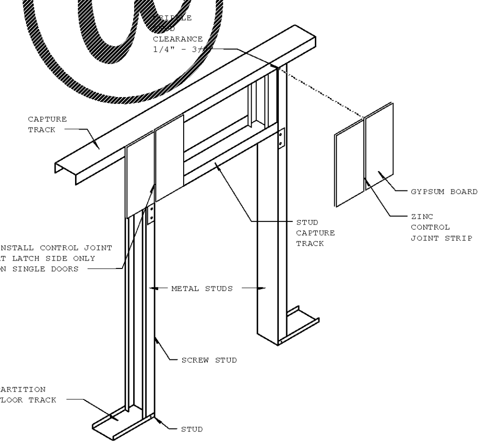

6 CONTROL JOINT AT DOOR JAMB
12" = 1'-0"

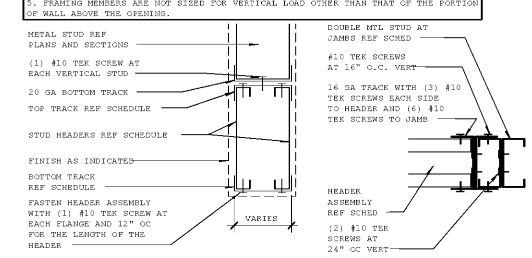

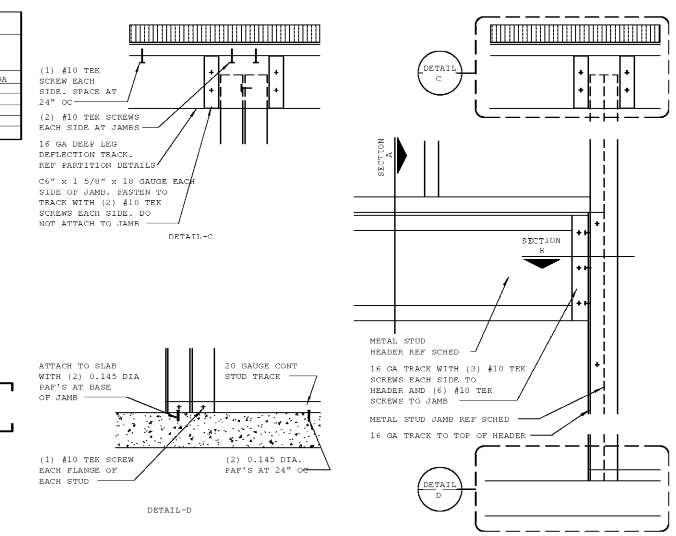

5 HEADER CONNECTION DETAIL
1 1/2" = 1'-0"

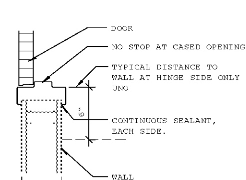

4 JAMB
1 1/2" = 1'-0"

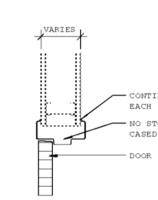

3 HEAD
1 1/2" = 1'-0"

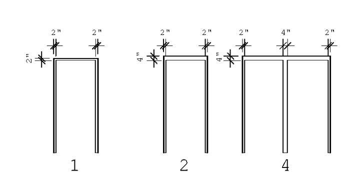

2 FRAME TYPES
3/16" = 1'-0"

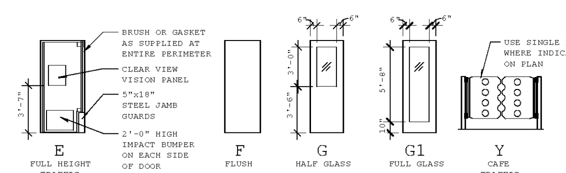

1 DOOR TYPES
3/16" = 1'-0"

1923 Prospect Ave
Orlando, FL 32814
P (407) 661-9100
F (407) 661-9101
Cuhaci & Peterson
Architects Engineers Planners

STIPULATION FOR REUSE
THIS DRAWING WAS PREPARED FOR USE ON A SPECIFIC SITE AT: JESUP, GA CONTEMPORANEOUSLY WITH ITS ISSUE DATE ON 10/05/18 SUITABLE FOR USE ON A DIFFERENT PROJECT SITE OR AT A LATER TIME. USE OF THIS DRAWING FOR REFERENCE OR EXAMPLE ON ANOTHER PROJECT REQUIRES THE SERVICES OF PROPERLY LICENSED ARCHITECTS AND ENGINEERS. REPRODUCTION OF THIS DRAWING FOR REUSE ON ANOTHER PROJECT IS NOT AUTHORIZED AND MAY BE CONTRARY TO THE LAW.

CONSULTANTS

Walmart
JESUP, GA
STORE NO: 2630
JOB NUMBER: 2180278 PROTO: 139 SC

ISSUE BLOCK

1	PR#1	10/26/18

CHECKED BY:	RD
DRAWN BY:	MB
PROTO CYCLE:	09/07/1
DOCUMENT DATE:	10/05/1

NOT FOR CONSTRUCTION

DOOR AND ROOM FINISH SCHEDULE

SHEET: A8

10/23/2018 11:34:53 AM
C:\Users\LindaR\Documents\...up_GA_139_R_ARCH_V18_LindaR.rvt