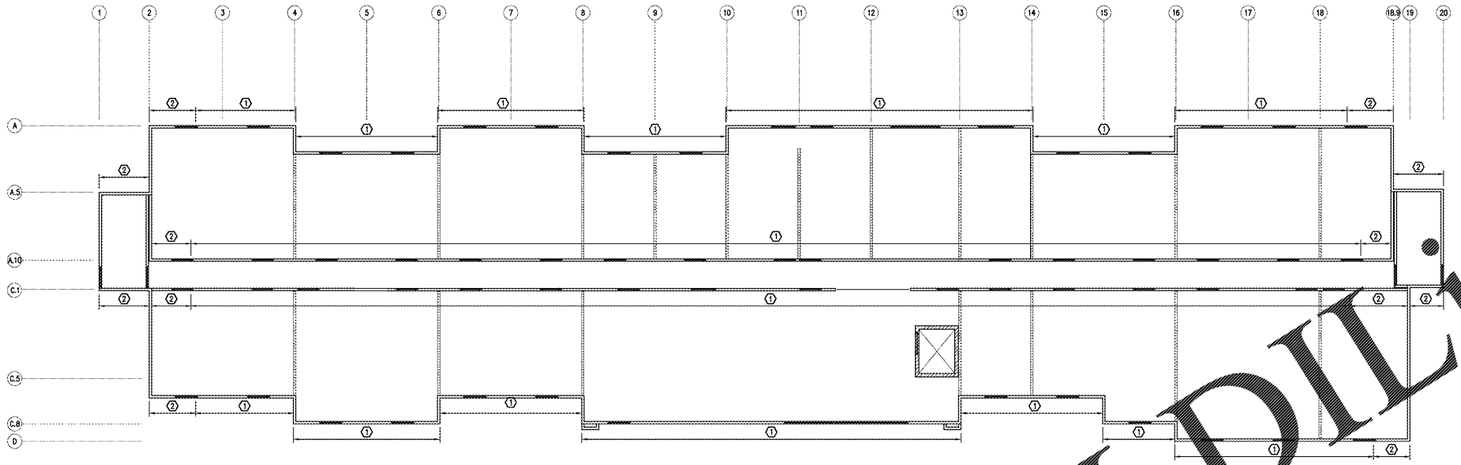

WIND UPLIFT RESTRAINT PLAN

PLAN KEYNOTES

| MARK | URS ROD SPACING | URS ROD TERMINATION |
|---|---|---|
| 1 | 3/8"ø ROD @ 4'-0" O.C. | TERMINATE AT 2ND FLOOR DBL TOP PL |
| 2 | 3/8"ø ROD @ 2'-8" O.C. | TERMINATE AT 2ND FLOOR DBL TOP PL |

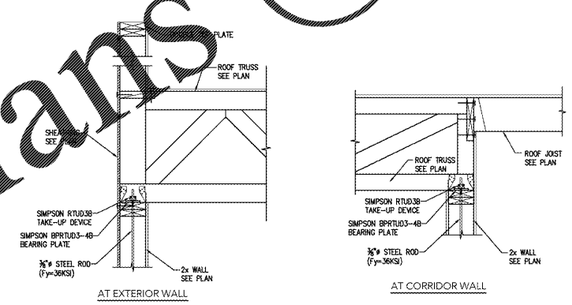


URS AT ROOF TRUSS
1" = 1'-0"
1 S206

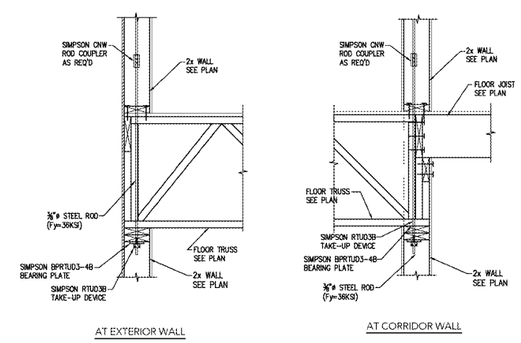


URS ROD TERMINATION AT FLOOR
1" = 1'-0"
2 S206

Order Plans @ www.LDILine.com

RULE JOY TRAMMELL | RUBIO INC.
ARCHITECTURE | INTERIOR DESIGN
300 Galleria Parkway Suite 740 Atlanta, Georgia 30339
770-661-1492 (phone) 770-661-1493 (fax)
www.rjtrdesign.com

THIS DRAWING IS THE PROPERTY OF RULE JOY TRAMMELL - RUBIO, LLC AND MAY NOT BE REPRODUCED WITHOUT WRITTEN CONSENT

PRINTED

| DATE | ISSUE/REVISION |
|---|---|
| 11/01/18 | FOR PERMIT |

GEORGIA REGISTERED PROFESSIONAL ENGINEER KURT SANDMAN 11/01/2018

ISSUED FOR PERMIT

WIND UPLIFT RESTRAINT PLAN

# EXTENDED STAY OF AMERICA

POOLER, GA

COMMISSION NO: 18-120.00

DRAWING NO:

S206

SANDMAN Structural Engineers
1387 John Avenue South · Moorhead, MN 56560
218.227.0022 www.SandmanSE.com Project: 18142-5