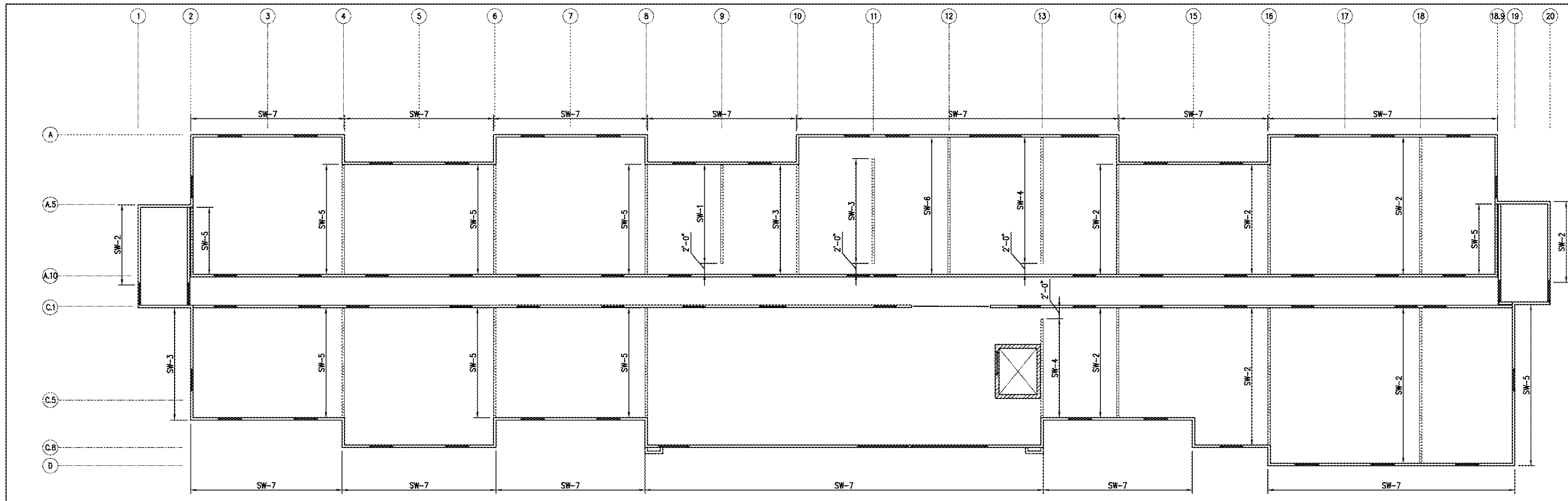


## SHEARWALL PLAN
NO SCALE

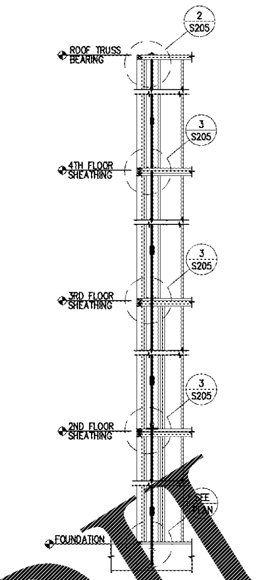


## STRONG- ROD ATS
1/4"=1'-0" (1 / S205)

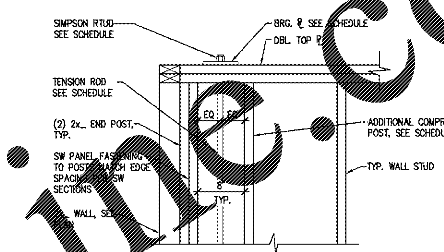


## TIE DOWN @ ROOF LEVEL
1" = 1'-0" (2 / S205)

## SHEAR WALL SCHEDULE

| LABEL | 4TH LEVEL TENSION ROD | 4TH LEVEL T.O. WALL TAKE-UP DEVICE | 4TH LEVEL T.O. WALL BEARING PLATE | 4TH LEVEL END POST/ COMP POST | 3RD LEVEL TENSION ROD | 3RD LEVEL T.O. WALL TAKE-UP DEVICE | 3RD LEVEL T.O. WALL BEARING PLATE | 3RD LEVEL END POST/ COMP POST | 2ND LEVEL TENSION ROD | 2ND LEVEL T.O. WALL TAKE-UP DEVICE | 2ND LEVEL T.O. WALL BEARING PLATE | 2ND LEVEL END POST/ COMP POST | 1ST LEVEL TENSION ROD | 1ST LEVEL T.O. WALL TAKE-UP DEVICE | 1ST LEVEL T.O. WALL BEARING PLATE | 1ST LEVEL END POST/ COMP POST | BASE TENSION ROD ANCHOR | SILL ℙ FASTENING @ BASE LEVEL |
|---|---|---|---|---|---|---|---|---|---|---|---|---|---|---|---|---|---|---|
| SW-1 | ½"Ø THREADED ROD | SIMPSON RTUD4 | SIMPSON BPRTUD3-4 | (2) 2x6/ (1) 2x6 | ¾" THREADED ROD | SIMPSON RTUD6 | SIMPSON BPRTUD5-6A | (2) 2x6/ (1) 2x6 | ¾"ø THREADED ROD (H.S.) | SIMPSON RTUD6 | SIMPSON BPRTUD5-6B | (2) 2x6/ (2) 2x6 | ⅞"ø THREADED ROD (H.S.) | SIMPSON ATUD9 | PL9-5x12 | (2) 2x6/ (5) 2x6 | 1"Ø ADHESIVE ANCHOR w/ 1'-6" CONC. EMBED INTO TOP OF FOOTING. | ½"øx5" SIMPSON TITEN HD ANCHORS @ 1'-4" O.C. |
| SW-2 | ½"ø THREADED ROD | SIMPSON RTUD4 | SIMPSON BPRTUD3-4 | (2) 2x6/ (1) 2x6 | ½"ø THREADED ROD | SIMPSON RTUD4 | SIMPSON BPRTUD3-4 | (2) 2x6/ (1) 2x6 | ⅝"ø THREADED ROD | SIMPSON RTUD5 | SIMPSON BPRTUD5-6A | (2) 2x6/ (1) 2x6 | ⅝"ø THREADED ROD (H.S.) | SIMPSON RTUD5 | SIMPSON BPRTUD5-6A | (2) 2x6/ (2) 2x6 | ¾"ø ADHESIVE ANCHOR W/1'-6" CONC. EMBED INTO TOP OF FOOTING. | ½"øx5" SIMPSON TITEN HD ANCHORS @ 2'-0" O.C. |
| SW-3 | ½"ø THREADED ROD | SIMPSON RTUD4 | SIMPSON BPRTUD3-4 | (2) 2x6/ (1) 2x6 | ⅝"ø THREADED ROD | SIMPSON RTUD5 | SIMPSON BPRTUD5-6A | (2) 2x6/ (1) 2x6 | ¾"ø THREADED ROD (H.S.) | SIMPSON RTUD6 | SIMPSON BPRTUD5-6B | (2) 2x6/ (2) 2x6 | ¾"ø THREADED ROD (H.S.) | SIMPSON RTUD6 | SIMPSON BPRTUD5-6C | (2) 2x6/ (5) 2x6 | 1"Ø ADHESIVE ANCHOR w/ 1'-6" CONC. EMBED INTO TOP OF FOOTING. | ½"øx5" SIMPSON TITEN HD ANCHORS @ 1'-4" O.C. |
| SW-4 | ½"ø THREADED ROD | SIMPSON RTUD4 | SIMPSON BPRTUD3-4 | (2) 2x6/ (1) 2x6 | ½"ø THREADED ROD | SIMPSON RTUD4 | SIMPSON BPRTUD3-4 | (2) 2x6/ (1) 2x6 | ⅝"ø THREADED ROD | SIMPSON RTUD5 | SIMPSON BPRTUD5-6A | (2) 2x6/ (1) 2x6 | ¾"ø THREADED ROD | SIMPSON RTUD6 | SIMPSON BPRTUD5-6A | (2) 2x6/ (1) 2x6 | ¾"Ø ADHESIVE ANCHOR W/1'-6" CONC. EMBED INTO TOP OF FOOTING. | ½"øx5" SIMPSON TITEN HD ANCHORS @ 3'-4" O.C. |
| SW-5 | ½"ø THREADED ROD | SIMPSON RTUD4 | SIMPSON BPRTUD3-4 | (2) 2x6/ (1) 2x6 | ⅝"ø THREADED ROD | SIMPSON RTUD5 | SIMPSON BPRTUD5-6A | (2) 2x6/ (1) 2x6 | ¾"ø THREADED ROD | SIMPSON RTUD6 | SIMPSON BPRTUD5-6A | (2) 2x6/ (1) 2x6 | ¾"ø THREADED ROD (H.S.) | SIMPSON RTUD6 | SIMPSON BPRTUD5-6C | (2) 2x6/ (3) 2x6 | ¾"Ø ADHESIVE ANCHOR w/ 1'-6" CONC. EMBED INTO TOP OF FOOTING. | ½"øx5" SIMPSON TITEN HD ANCHORS @ 1'-4" O.C. |
| SW-6 | ½"ø THREADED ROD | SIMPSON RTUD4 | SIMPSON BPRTUD3-4 | (2) 2x6/ (1) 2x6 | ⅝"ø THREADED ROD | SIMPSON RTUD5 | SIMPSON BPRTUD5-6A | (2) 2x6/ (1) 2x6 | ¾"ø THREADED ROD | SIMPSON RTUD6 | SIMPSON BPRTUD5-6A | (2) 2x6/ (1) 2x6 | ¾"ø THREADED ROD (H.S.) | SIMPSON RTUD6 | SIMPSON BPRTUD5-6C | (2) 2x6/ (3) 2x6 | ¾"Ø ADHESIVE ANCHOR W/ 1'-6" CONC. EMBED INTO TOP OF FOOTING. | ½"øx5" SIMPSON TITEN HD ANCHORS @ 1'-0" O.C. |
| SW-7 | NOT REQUIRED | NOT REQUIRED | NOT REQUIRED | (2) 2x6 | NOT REQUIRED | NOT REQUIRED | NOT REQUIRED | (2) 2x6 | NOT REQUIRED | NOT REQUIRED | NOT REQUIRED | (2) 2x6 | NOT REQUIRED | NOT REQUIRED | NOT REQUIRED | (3) 2x6 | NOT REQUIRED | ½"øx5" SIMPSON TITEN HD ANCHORS @ [illegible] O.C. |

SHEARWALL NOTES:

1. SEE S001 STRUCTURAL NOTES FOR TYPICAL SHEATHING REQUIREMENTS. NOT SHOWN ON WALL SECTIONS.
2. SEE S001 STRUCTURAL NOTES FOR SILL PLATE ANCHORS AND ADHESIVE REQUIREMENTS AT HOLD-DOWNS.
3. INTERIOR BEARING WALL SILL PLATE FASTENING TO BE ½"øx5" TITEN HD ANCHORS @ 4'-0" O.C. U.N.O. IN SHEAR WALL SCHEDULE. PROVIDE STANDARD CUT WASHERS, U.N.O. SEE DETAIL 1/S301 FOR ANCHOR DIMENSIONS.
4. EXTERIOR BEARING WALL SILL PLATE FASTENING TO BE ½"øx5" TITEN HD ANCHORS @ 4'-0" O.C. U.N.O. IN SHEAR WALL SCHEDULE. PROVIDE STANDARD CUT WASHERS, U.N.O. SEE DETAIL 1/S301 FOR ANCHOR DIMENSIONS.
5. PROVIDE SIMPSON BPS½-3HDG SILL ANCHOR WASHERS AT ALL SHEAR WALLS.
6. SHEARWALL TENSION RODS TO BE HIGH STRENGTH STEEL (FU=120 KSI MIN).
7. SEE DETAIL 4/S205 FOR STAGGERED FASTENING AND DOUBLE STUD REQUIREMENTS WHERE PANEL EDGE FASTENING IS 3" O.C. OR LESS.
8. MAXIMUM WALL STUD SPACING TO BE 16" O.C. FOR ALL SHEAR WALLS.
9. 2x6 STUDS REQUIRED AT ALL END/COMPRESSION POSTS
10. IF ALTERNATE ATS IS PREFERRED, GC TO CONTACT EOR FOR APPROVAL
11. ADHESIVE ANCHORS TO BE GRADE A193 THREADED RODS WITH SIMPSON SET-3G ADHESIVE.

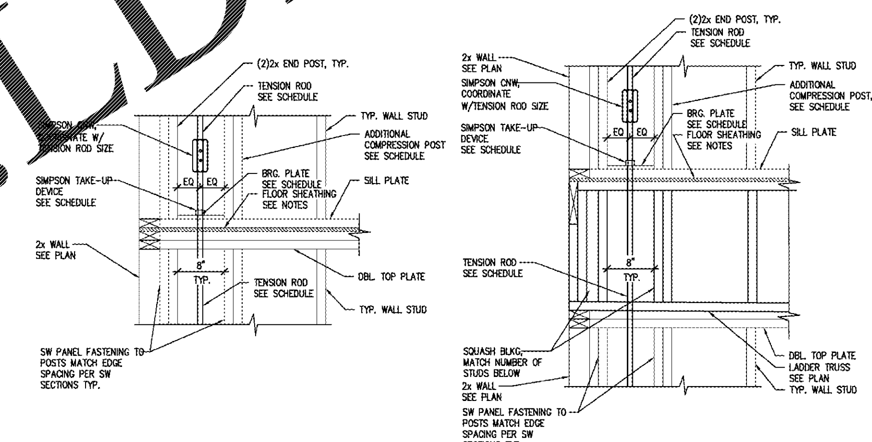


## TIE DOWN @ FLOOR LEVEL
1" = 1'-0" (3 / S205)

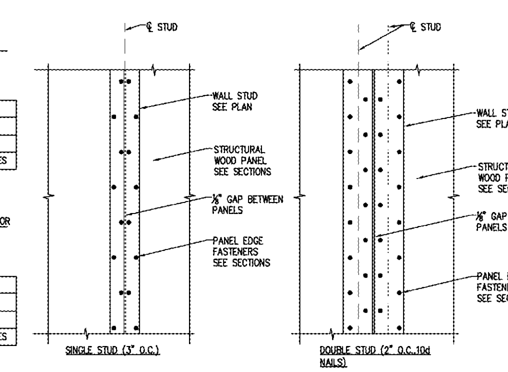


## STAGGERED NAILS @ PANEL EDGES
1" = 1'-0" (4 / S205)

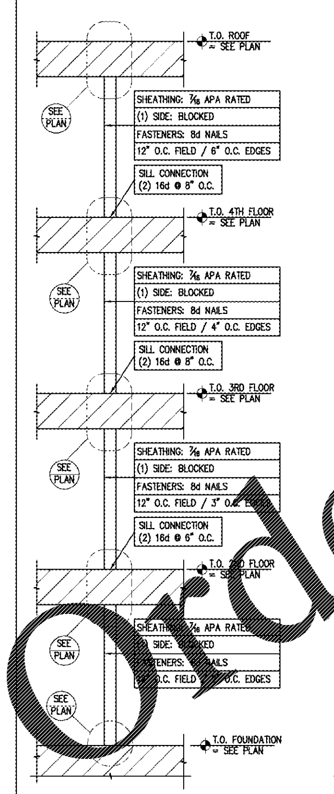


## SW SECTION (SW-1)
NO SCALE (5 / S205)

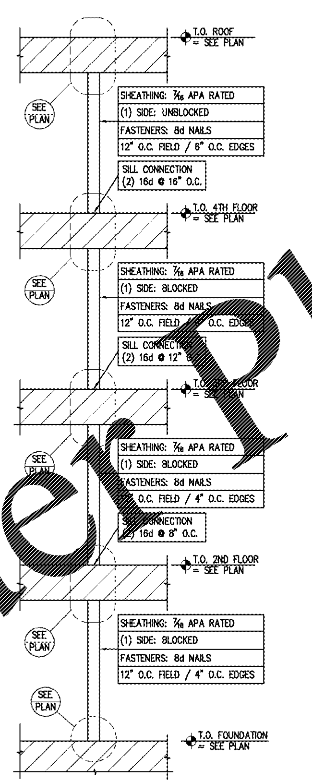


## SW SECTION (SW-2)
NO SCALE (6 / S205)

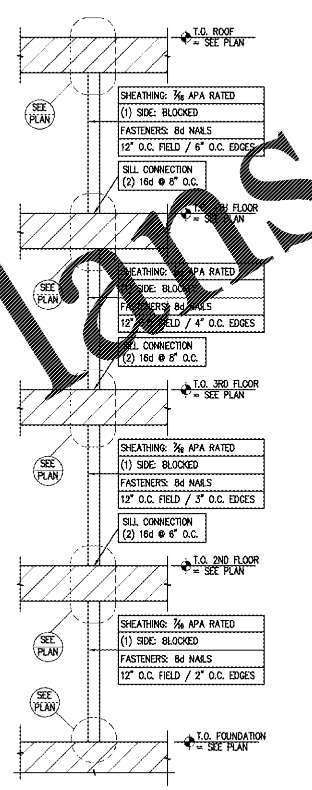


## SW SECTION (SW-3)
NO SCALE (7 / S205)

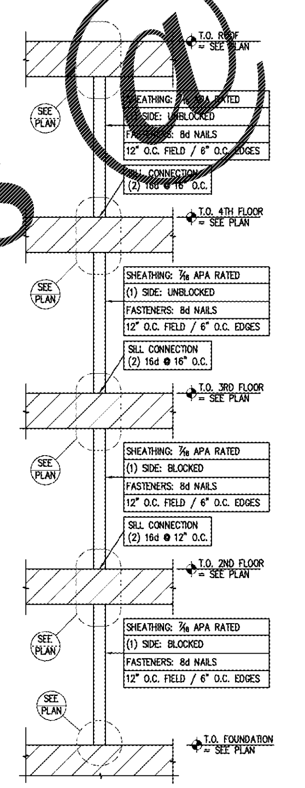


## SW SECTION (SW-4)
NO SCALE (8 / S205)

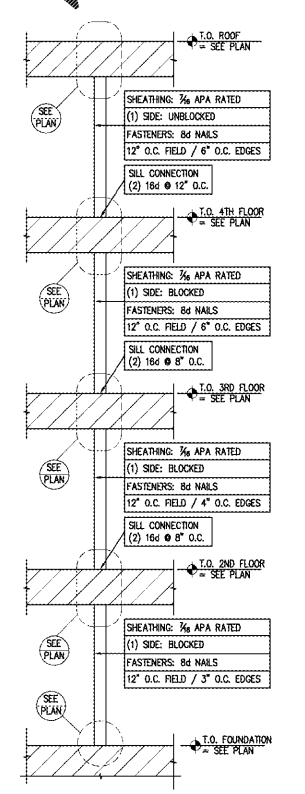


## SW SECTION (SW-5)
NO SCALE (9 / S205)

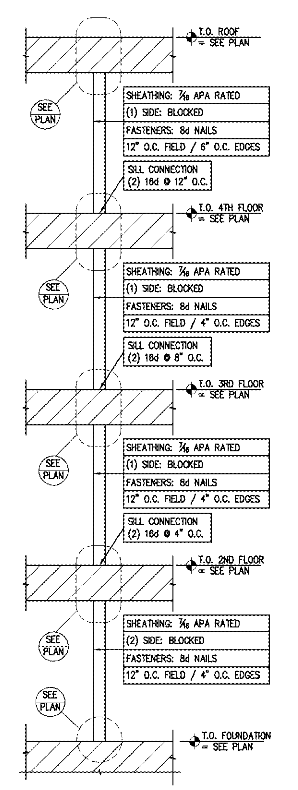


## SW SECTION (SW-6)
NO SCALE (10 / S205)

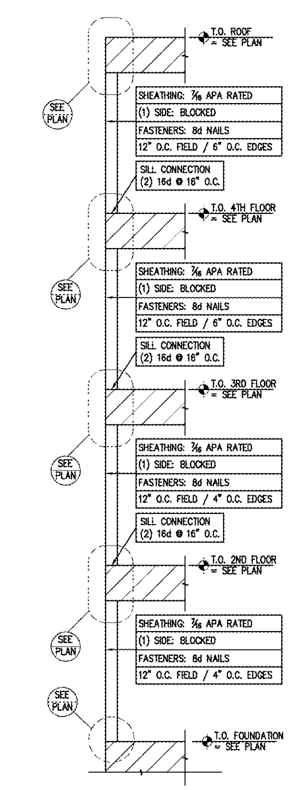


## SW SECTION (SW-7)
NO SCALE (11 / S205)

SANDMAN Structural Engineers
1587 30th Avenue South - Moorhead, MN 56560
218.227.0022 www.SandmanSE.com Project: 18142-5

RULE JOYTRAMMELL RUBIO LLC
ARCHITECTURE INTERIOR DESIGN
300 Galleria Parkway Suite 740 Atlanta, Georgia 30339
770-661-1492 (phone) 770-661-1493 (fax)
www.rjtrdesign.com

THIS DRAWING IS THE PROPERTY OF RULE JOY TRAMMELL + RUBIO, LLC AND MAY NOT BE REPRODUCED WITHOUT WRITTEN CONSENT

PRINTED

| DATE | ISSUE/REVISION |
|---|---|
| 11/01/18 | FOR PERMIT |

GEORGIA REGISTERED PROFESSIONAL ENGINEER No. PE039766 KURT SANDMAN 11/01/2018

ISSUED FOR PERMIT

SHEARWALL PLAN

# EXTENDED STAY OF AMERICA

POOLER, GA

COMMISSION NO: 18-120.00

DRAWING NO:

S205

Order Plans @ WWW.LDHLine.com