INTERIOR ELEVATION GENERAL NOTES

1. DIMENSIONS ARE TO FACE OF GYP. BOARD, UNO.
2. REFER TO SHEETS AT.06 & AT.07 FOR:
   A. FINISHES
   B. TOILET ACCESSORIES
   C. EQUIPMENT
   D. PLUMBING FIXTURES
   E. INTERIOR ELEVATION SYMBOL LEGEND
   F. MILLWORK FINISH LEGEND
3. SEE REFLECTED CEILING PLANS FOR CEILING FIXTURE AND DIFFUSER TYPES & LOCATIONS.
4. SEE FINISH PLANS FOR FINISH LIMITS.
5. SEE SHEET AT.04A & AT.04B FOR TYPICAL ADA CLEARANCES & MOUNTING REQUIREMENTS.
6. SEE SHEET A9.01 FOR DOOR SCHEDULE & ELEVATIONS. SEE A5.30 FOR WINDOW ELEVATIONS.
7. REFER TO INTERIOR ELEVATIONS FOR BATHROOM ACCESSORY MOUNTING HEIGHTS & POSITIONS.
8. REFER TO INTERIOR ELEVATIONS FOR WALL-MOUNTED DEVICE LOCATIONS. ALL OUTLETS CENTERED @ 18" A.F.F., U.N.O. ALL SWITCHES CENTERED @ 48" A.F.F., U.N.O.
9. WHERE SWITCHES AND/OR OUTLETS ARE ADJACENT, PLACE IN MULTI-GANG BOX, NOT MULTIPLE SINGLE-GANG BOXES.
10. SEE COMPLETE FLOOR PLANS IN A1 SERIES FOR ROOM TYPE LOCATIONS.

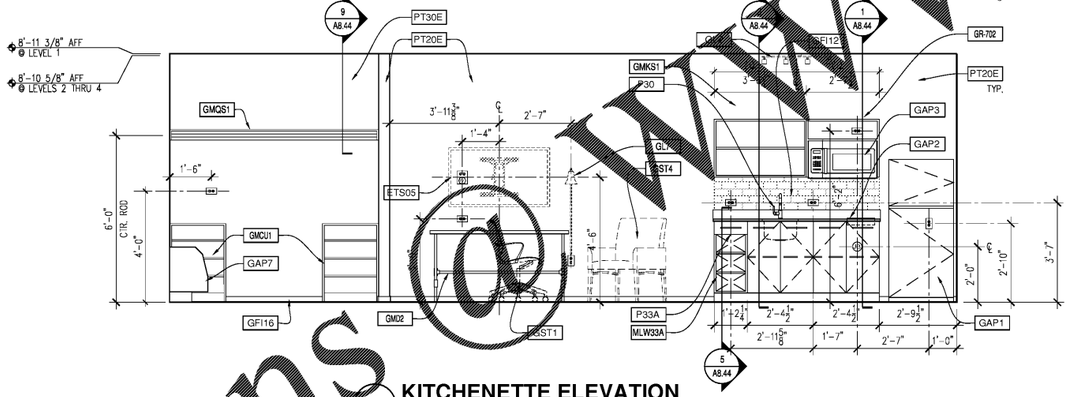

4 KITCHENETTE ELEVATION
Scale: 1/2"=1'0"

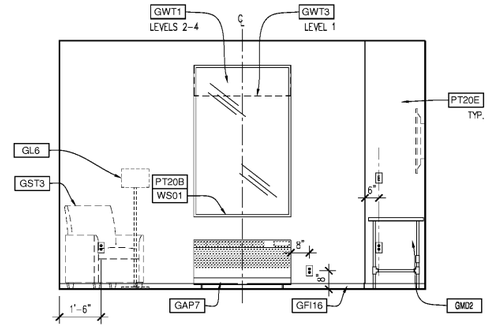

3 EXTERIOR WALL ELEVATION
Scale: 1/2"=1'0"

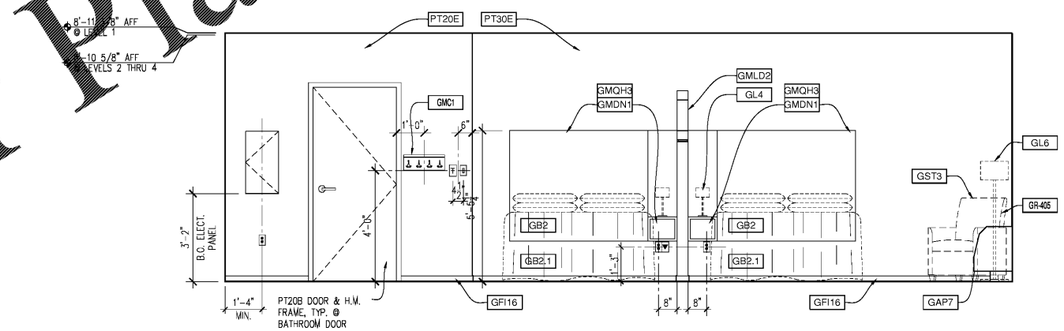

2 BED/BATHROOM ENTRY WALL ELEVATION
Scale: 1/2"=1'0"

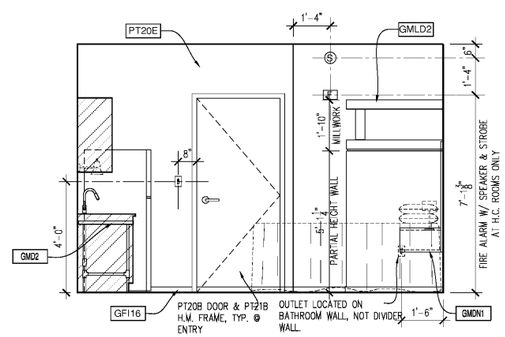

1 ENTRY WALL ELEVATION
Scale: 1/2"=1'0"

Order Plans @ WWW.LDILine.com

RJTR
RULE JOY TRAMMELL | RUBIO
ARCHITECTURE | INTERIOR DESIGN
300 Galleria Parkway Suite 740 Atlanta, Georgia 30339
770-661-1492 (phone) 770-661-1493 (fax)
www.rjtrdesign.com

PRINTED	
DATE	ISSUE/REVISION
11/01/18	Issued for Permit

STATE OF GEORGIA
GREGORY T. BLAYLOCK
CERTIFICATE NO. 0[illegible]
REGISTERED ARCHITECT

ISSUED FOR CONSTRUCTION

IDEAL STUDIO DOUBLE QUEEN - NARROW (IS-QQ) INTERIOR ELEVATIONS

EXTENDED STAY AMERICA

POOLER, GA

COMMISSION NO: 18-[illegible]

DRAWING NO:

A8.09