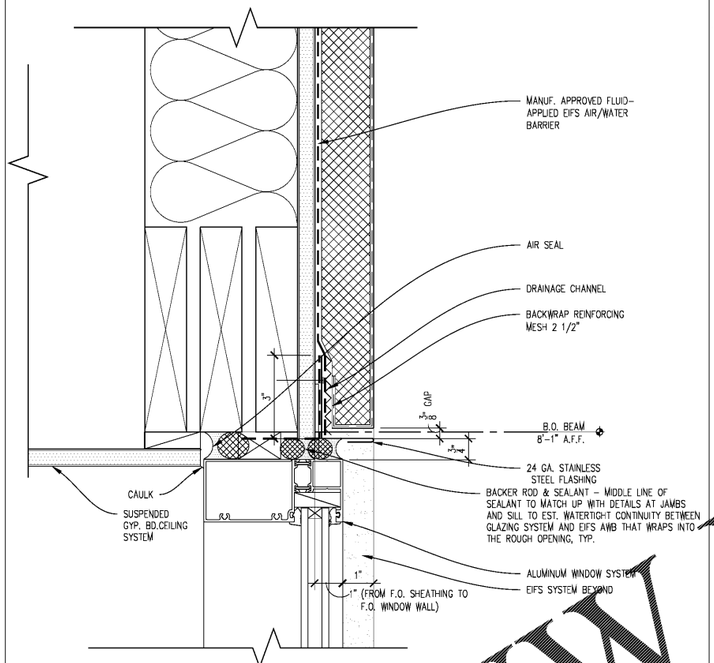

4 EIFS HEAD DETAIL @ STOREFRONT
Scale: 6" = 1' - 0"

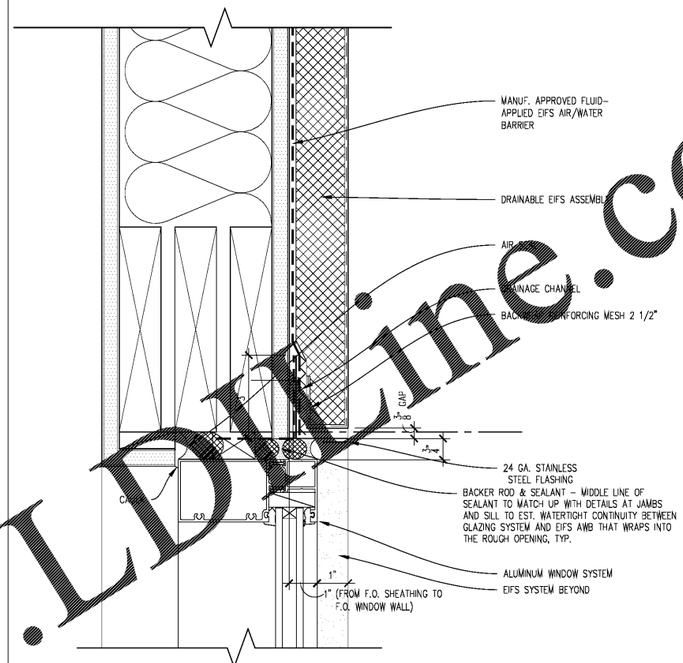

2 EIFS HEAD DETAIL @ WINDOW WALL PUNCHED OPENING
Scale: 6" = 1' - 0"

R-VALUE LEGEND
1. WALLS: R-19, PROVIDE FULL BATT INSULATION AND 1" E.I.F.S. SYSTEM
2. ROOF: R-38

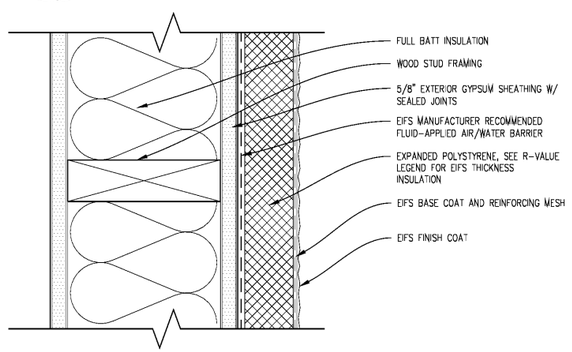

DRAINABLE EIFS

3 EIFS DETAIL @ EXTERIOR WALL
Scale: 6" = 1' - 0"

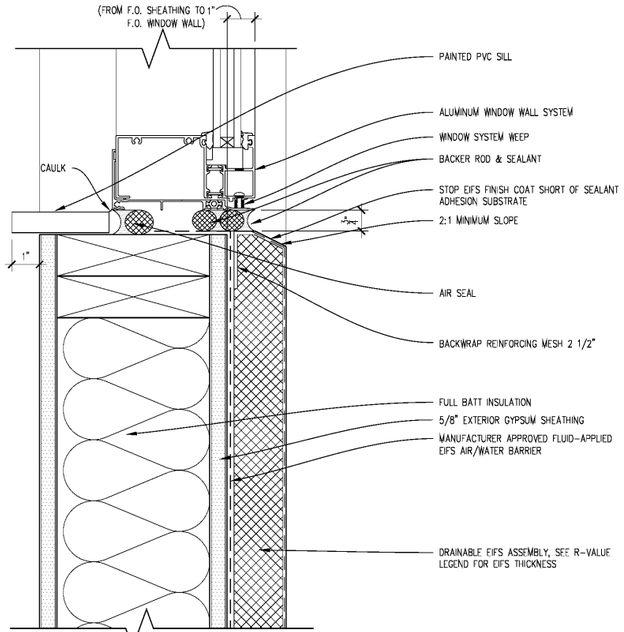

1 EIFS SILL DETAIL @ WINDOW WALL PUNCHED OPENING
Scale: 6" = 1' - 0"

Order Plans @ WWW.LDILine.com

RJTR
RULE JOY TRAMMELL | RUBIO
ARCHITECTURE | INTERIOR DESIGN
300 Galleria Parkway Suite 740 Atlanta, Georgia 30339
770-661-1492 (phone) 770-661-1493 (fax)
www.rjtrdesign.com

PRINTED	
DATE	ISSUE/REVISION
11/01/18	Issued for Permit

STATE OF GEORGIA
GREGORY T. BLAYLOCK
CERTIFICATE NO. 0[illegible]
FREQUENCY 1[illegible]
11/27/18

ISSUED FOR CONSTRUCTION

DRAINABLE EIFS DETAILS

EXTENDED STAY AMERICA
POOLER, GA

COMMISSION NO: 18-[illegible]

DRAWING NO:
A7.62