GENERAL NOTES

1. ALL WINDOW DIMENSIONS SHOWN REPRESENT UNIT DIMENSIONS.
2. ALL WINDOWS TO RECEIVE 3/4" SEALANT ALL AROUND UNIT, UNO.
3. ALL WINDOW FRAMES TO BE BRONZE COLOR.
4. ALL INTERIOR WINDOWS SHALL HAVE 1/4" CLEAR GLASS, UNO.
5. AT ALL WINDOWS LOCATED ABOVE FINISH FLOOR LEVEL, PROVIDE WHITE PVC SILL ON INTERIOR SIDE(S) OF WINDOW AND PAINT PT20B.

(T) = TEMPERED GLASS AT THIS LOCATION

0 8" 1'-4" 2'-8"
SCALE: 3/4" = 1'-0"

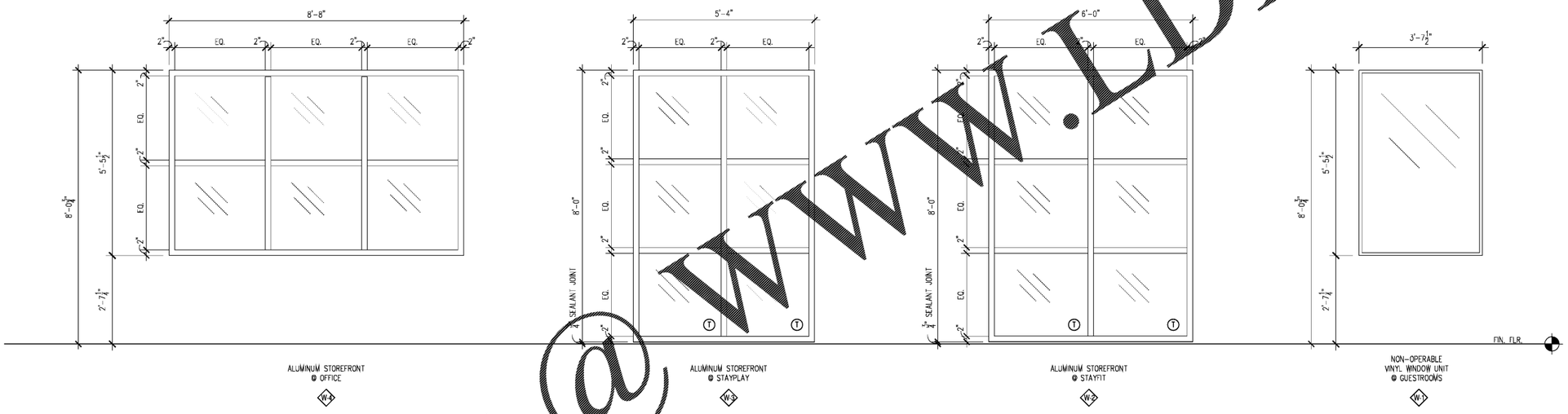

ALUMINUM STOREFRONT @ OFFICE
W-4

ALUMINUM STOREFRONT @ STAYPLAY
W-3

ALUMINUM STOREFRONT @ STAYFIT
W-2

NON-OPERABLE VINYL WINDOW UNIT @ GUESTROOMS
W-1

EXTERIOR WINDOWS

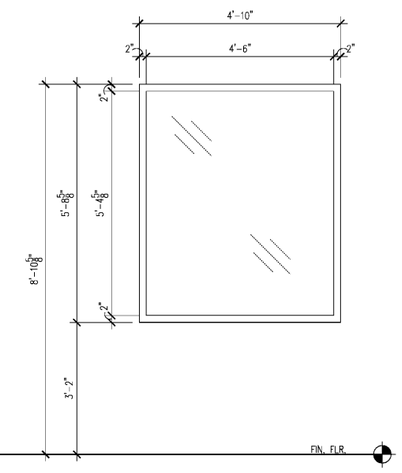

ALUMINUM STOREFRONT @ OFFICE / RECEPTION
W-1

INTERIOR WINDOWS

RJTR
RULE JOY TRAMMELL | RUBIO
ARCHITECTURE | INTERIOR DESIGN
300 Galleria Parkway Suite 740 Atlanta, Georgia 30339
770-661-1492 (phone) 770-661-1493 (fax)
www.rjtrdesign.com

PRINTED	
DATE	ISSUE/REVISION
11/01/18	Issued for Permit

STATE OF GEORGIA
GREGORY T. BLAYLOCK
CERTIFICATE NO. 0[illegible]
REGISTERED ARCHITECT

ISSUED FOR CONSTRUCTION

WINDOW ELEVATIONS

EXTENDED STAY AMERICA

POOLER, GA

COMMISSION NO: 18-[illegible]

DRAWING NO:

A5.30

Order Plans @ WWW.LDILine.com