Order Plans @ WWW.LDILine.com

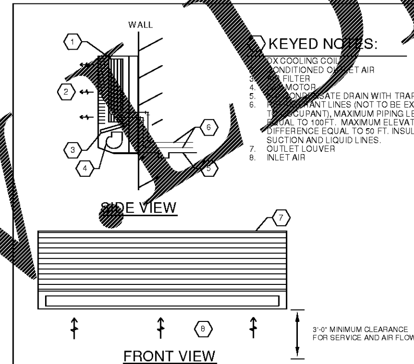

KEYED NOTES:
1. DX COOLING COIL
2. CONDITIONED OUTLET AIR
3. AIR FILTER
4. FAN MOTOR
5. CONDENSATE DRAIN WITH TRAP
6. REFRIGERANT LINES (NOT TO BE EXPOSED TO OCCUPANT), MAXIMUM PIPING LENGTH EQUAL TO 100FT. MAXIMUM ELEVATION DIFFERENCE EQUAL TO 50 FT. INSULATE SUCTION AND LIQUID LINES.
7. OUTLET LOUVER
8. INLET AIR

238126.00-06 - DUCTLESS AIR CONDITION UNIT WALL

SCALE: NONE

KEYED NOTES:
1. GAS FIRED ROOFTOP UNIT LOCATE A MINIMUM OF 10'-0" FROM EDGE OF ROOF AND ROOF HATCH
2. CANVAS FLEXIBLE CONNECTION
3. 1" ACOUSTICALLY LINED DUCTS
4. 4x4 ANGLE FASTENED TO ROOF DECK AND STRUCTURAL SYSTEM. PROVIDE SUPPORTS AS REQUIRED
5. FACTORY FABRICATED, INSULATED ROOF CURB (BY SAME MFG'R AS UNIT)
6. FASTEN CURB TO DECK
7. INSULATED RADIUSED ELBOW
8. UNION BY PLUMBING CONTRACTOR (PC)
9. GAS SHUT-OFF VALVE BY PC
10. GAS LINE (BLACK STEEL) BY PC
11. SECURE TO CURB
12. WOOD NAILER
13. ROOFING MEMBRANE, FLASH UP TO BELOW WOOD NAILOR
14. CANT STRIP
15. ROOF DECK - CUT OPENINGS FOR DUCT PENETRATIONS ONLY
16. CONDENSATE TRAP - SEE CONDENSATE DRAIN TRAP DETAIL
17. HIGH WATER ALARM IN CONDENSATE DRAIN PAN. WIRE TO BREAK 24 VOLT CONTROL POWER IN THE CASE OF A HIGH WATER EVENT.

GENERAL NOTES:
A. CONTRACTOR SHALL PROVIDE CURB TO MAINTAIN 14" MINIMUM ABOVE FINISHED ROOFING SYSTEM. PROVIDE ADDITIONAL BLOCKING AS REQUIRED TO ACCOMMODATE ROOF INSULATION THICKNESS
B. FINAL LOCATION AND STRUCTURAL VERIFICATION BY OTHERS.

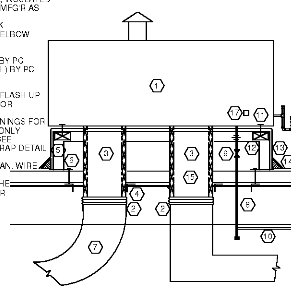

237433.00-04 - ROOF CURB & MOUNTING C

SCALE: NONE

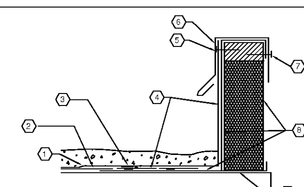

KEYED NOTES:
1. ROOFING MEMBRANE AND BALLAST
2. SUPSHEET (SEE ROOFING SPECS)
3. SOLVENT WELD (SEE ROOFING SPECS)
4. ROOF FLASHING
5. FASTENER
6. SHEET METAL CURB COVER AND COUNTER FLASHING
7. FASTENER WITH ONE 1/4" Ø NEOPRENE WASHER
8. PRE-FABRICATED INSULATED ROOF CURB
9. CURB TYPE AND FLASHING PER ROOFING MANUFACTURER'S REQUIREMNETS. FLASH UP AND UNDER CURB CAP

GENERAL NOTES:
A. ALLOW FOR SUFFICIENT HEIGHT FOR CURB TO EXTEND FROM ROOF STRUCTURE THROUGH ROOF INSULATION (IF ANY - V.I.F.) TO A HEIGHT OF 12" ABOVE FINISHED ROOF SURFACE

236313.00-01 - EQUIPMENT ROOF CURB

SCALE: NONE

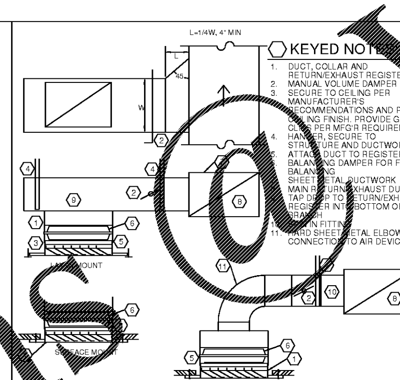

KEYED NOTES:
1. DUCT, COLLAR AND RETURN/EXHAUST REGISTER
2. MANUAL VOLUME DAMPER
3. SECURE TO CEILING PER MANUFACTURER'S RECOMMENDATIONS AND PER CEILING FINISH. PROVIDE GRID CLIPS PER MFG'R REQUIREMENTS
4. HANGER, SECURE TO STRUCTURE AND DUCTWORK
5. ATTACH DUCT TO REGISTER
6. BALANCING DAMPER FOR FINAL BALANCING
7. SHEET METAL DUCTWORK
8. MAIN RETURN/EXHAUST DUCT
9. TAP DROP TO RETURN/EXHAUST REGISTER INTO BOTTOM OF BRANCH
10. SPIN IN FITTING
11. HARD SHEET METAL ELBOW AT CONNECTION TO AIR DEVICE.

233713.00-21 - RETURN/EXHAUST REGISTER INSTALLATION

SCALE: NONE

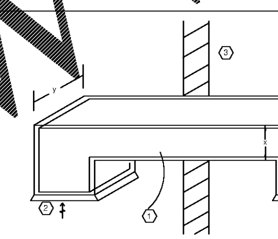

GENERAL NOTES:
A. SEE NEW WORK PLAN FOR DUCT SIZE
B. x + y DIMENSIONS SHALL BE DETERMINED FROM FLOOR PLANS

KEYED NOTES:
1. ½" ACOUSTIC LINING, SEAL AROUND ALL WALL PENETRATIONS
2. SEE NEW WORK PLAN FOR REGISTER
3. INTERIOR WALL/PARTITION

233713.00-19 - TRANSFER GRILLE

SCALE: NONE

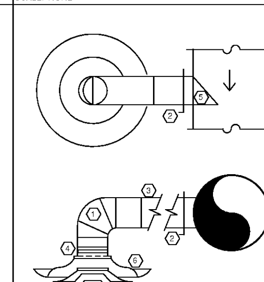

KEYED NOTES:
1. PROVIDE MANUFACTURED 90° OR STRAIGHT COLLAR
2. SPIN IN FITTING WITH MANUAL DAMPER
3. HANGER, SECURE TO STRUCTURE AND DUCTWORK
4. CLAMP
5. SCOOP
6. INSTALL DIFFUSER BELOW STRUCTURAL TRUSS SYSTEM

233713.00-08 - EXPOSED DUCT DIFFUSER INSTALLATION

SCALE: NONE

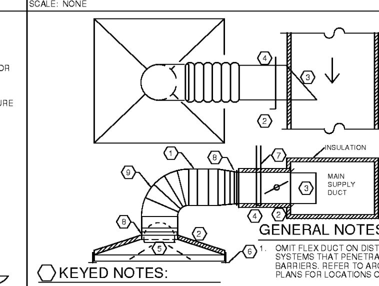

GENERAL NOTES:
1. OMIT FLEX DUCT ON DISTRIBUTION SYSTEMS THAT PENETRATE 1-HR FIRE BARRIERS. REFER TO ARCHITECTURAL PLANS FOR LOCATIONS OF FIRE BARRIERS.

KEYED NOTES:
1. MAXIMUM LENGTH OF INSUL. FLEX DUCT EQUALS 5 FEET. FLEX NOT PERMITTED IN INACCESSIBLE CEILINGS
2. INSULATED DUCT, COLLAR AND DIFFUSER BY HVAC CONTRACTOR
3. SCOOP
4. SPIN IN FITTING WITH MANUAL VOLUME DAMPER
5. INTERNAL BUTTERFLY DAMPER FOR DRYWALL APPLICATIONS ONLY. (PROVIDE KEY FOR ADJUSTMENT)
6. SECURE TO CEILING PER MANUFACTURER'S RECOMMENDATIONS AND PER CEILING FINISH. PROVIDE GRID CLIPS PER MFG'R REQUIREMENTS. PROVIDE FRAMING FOR DRYWALL INSTALLATION.
7. HANGER, SECURE TO STRUCTURE AND DUCTWORK
8. PEEL BACK INSULATION AND PROVIDE STRAPPING AND SHEET METAL SCREWS AT FLEX CONNECTION TO DUCT. THEN PROVIDE STRAPPING AROUND INSULATION.
9. SUPPORT FLEX TO PREVENT COLLAPSING

233713.00-04 - DIFFUSER INSTALLATION TYPICAL

SCALE: NONE

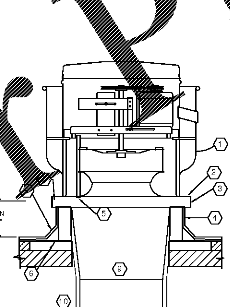

KEYED NOTES:
1. COAT ALL PARTS IN CONTACT WITH AIR STREAM WITH COATING AS SPECIFIED
2. HINGED BASE FOR ACCESS
3. ANCHOR ALL FOUR SIDES WITH SCREWS 12" O.C.
4. PREFABRICATED ACOUSTIC INSULATED ALUMINUM CURB.
5. CONDUIT HOLE
6. ANCHOR TO ROOF DECK AS REQUIRED
7. RUBBER GASKET APPLIED TO TOP OF CURB
8. ROOF UP UNDER FLASHING, CURB TYPE AND FLASHING PER ROOFING MFG'R RECOMMENDATIONS
9. CENTER TRANSITION TO DUCTWORK FROM DAMPER OR CURB. PROVIDE 3 DIAMETER STRAIGHT RUN MINIMUM.
10. INSULATED DUCTWORK MINIMUM OF 10' FROM ROOF PENETRATION.

GENERAL NOTES:
A. DELETE CANT FOR SINGLE MEMBRANE ROOFS.
B. TOP OF CURB MUST BE LEVEL. FABRICATE PITCH IN CURB IF NECESSARY
C. CONTRACTOR HAS THE OPTION TO INCREASE THE HEIGHT OF THE CURB OR ADD BLOCKING TO THE CURB. THE ADDITIONAL HEIGHT REQUIRED SHALL EQUAL THE ROOF ASSEMBLY THICKNESS. THE CURB INTAKE OPENING SHALL BE AT A MINIMUM 12" ABOVE THE FINISHED ROOF.
D. LOCATE A MINIMUM OF 10'-0" FROM EDGE OF ROOF, INTAKES, AND ROOF HATCH.

233423.00-16 - UPBLAST EXHAUST FAN DETAIL

SCALE: NONE

GENERAL NOTES:
1. PROVIDE SPLITTER DAMPER (SD) AT ALL MAIN BRANCH TAKEOFFS
2. PROVIDE MANUAL VOLUME DAMPERS AT ALL BRANCH TAKEOFFS
3. PROVIDE MINIMUM 3 TIMES STRAIGHT INLET DIAMETER TO ALL VAV TERMINAL DEVICES
4. DAMPER NOT REQUIRED AT TERMINAL DEVICE TAKEOFF
5. ALL MANUAL DAMPERS SHALL BE LOCATED IN AN ACCESSIBLE CEILING. PROVIDE ACCESS PANEL AS REQUIRED

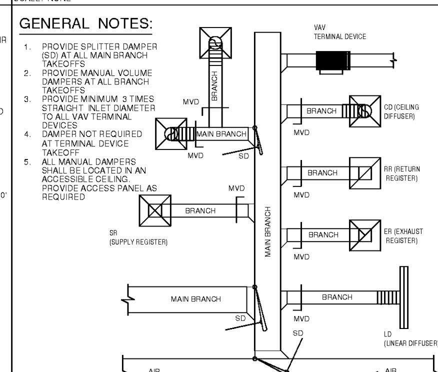

233300.00-01 - MANUAL DAMPER DETAIL

SCALE: NONE

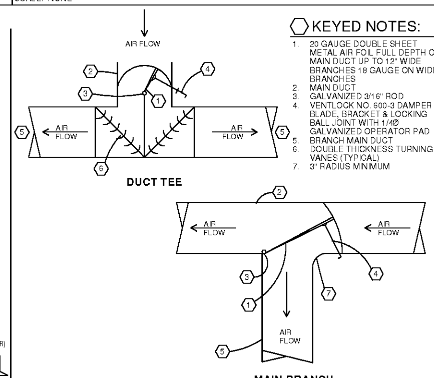

KEYED NOTES:
1. 20 GAUGE DOUBLE SHEET METAL AIR FOIL FULL DEPTH OF MAIN DUCT UP TO 12" WIDE BRANCHES 18 GAUGE ON WIDER BRANCHES
2. MAIN DUCT
3. GALVANIZED 3/16" ROD
4. VENTLOCK NO. 600-3 DAMPER BLADE, BRACKET & LOCKING BALL JOINT WITH 1/4Ø GALVANIZED OPERATOR PAD
5. BRANCH MAIN DUCT
6. DOUBLE THICKNESS TURNING VANES (TYPICAL)
7. 3" RADIUS MINIMUM

USE FOR 5 TONS & LESS

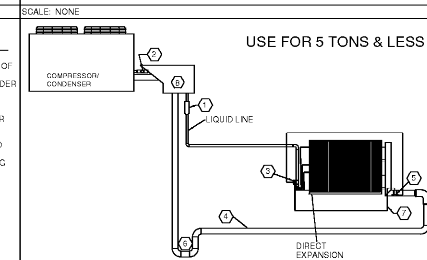

KEYED NOTES:
1. FIELD SUPPLIED FILTER DRIER, UNLESS PROVIDED INTERNALLY BY THE EQUIPMENT MANUFACTURER.
2. SIGHT GLASS
3. EXPANSION VALVE
4. SUCTION LINE W/FLEXIBLE CLOSED CELL ELASTOMER INSULATION
5. EXPANSION VALVE THERMAL BULB
6. TRAP FOR LONG VERTICAL RUNS (PER MFG. RECOMMENDATIONS)
7. EXPANSION VALVE EQUALIZER LINE
8. PROVIDE APPROPRIATELY SIZED DOG HOUSE CONSTRUCTION FOR ROOF PENETRATIONS.

GENERAL NOTES:
A. PIPE SIZES SHALL BE PER MFGR'S RECOMMENDATIONS.
B. PROVIDE 4" CONCRETE PAD ALL EXTERIOR UNITS ON GRADE.
C. PIPING LAYOUT AND CONFIGURATION SHALL BE INSTALLED PER MFGR'S RECOMMENDATIONS.
D. REFRIGERANT SPECIALTIES ARE SHOWN FOR SCHEMATIC PURPOSES ONLY AND SHALL BE COORDINATED PER MFGR'S INSTALLATION INSTRUCTIONS.
E. PROVIDE LOCKING-TYPE TAMPER RESISTANT CAPS ON ALL OUTDOOR REFRIGERANT CIRCUIT ACCESS PORTS.

232313.00-03 - REFRIGERANT PIPING A

SCALE: NONE

K = MINIMUM OF 1/2"
M = 1/2" PLUS MAXIMUM TOTAL STATIC PRESSURE

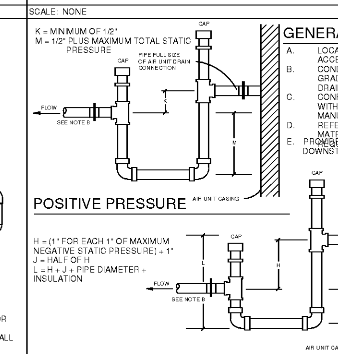

POSITIVE PRESSURE

H = (1" FOR EACH 1" OF MAXIMUM NEGATIVE STATIC PRESSURE) + 1"
J = HALF OF H
L = H + J + PIPE DIAMETER + INSULATION

NEGATIVE PRESSURE

GENERAL NOTES:
A. LOCATE TRAPS SO AS TO BE ACCESSIBLE FOR CLEANING.
B. CONDENSATE PIPING SHALL GRADUALLY SLOPE DOWN FROM DRAIN TRAP.
C. CONFIRM TRAP REQUIREMENTS WITH EQUIPMENT MANUFACTURER.
D. REFER TO SPECIFICATIONS FOR MATERIAL AND INSULATION REQUIREMENTS.
E. PROVIDE UNION UPSTREAM AND DOWNSTREAM OF TRAP.

NOTE: OUTDOOR UNITS AND UNITS LOCATED IN UNCONDITIONED SPACES WHICH PROVIDE COOLING IN THE WINTER MUST HAVE HEAT TRACE ON THE CONDENSATE PIPING.

232113.23-05 - CONDENSATE DRAIN TRAP POSITIVE & NEGATIVE

SCALE: NONE

OWNERSHIP OF INSTRUMENTS OF SERVICE
All reports, plans, specifications, computer files, field data, notes and other documents and instruments prepared by the Consultant as instruments of service shall remain the property of the Consultant. The Consultant shall retain all common law, statutory and other reserved rights, including, without limitation, the copyright thereto.

11/1/2018 1:46:29 PM

2" REFERENCE LINE

CR architecture + design
creating extraordinary places
www.cr-architects.com
800.469.4949
CINCINNATI 600 Vine Street suite 2210 Cincinnati, OH 45202 P 513.721.8080
DENVER 1675 Broadway suite 2400 Denver, CO 80202 P 800.469.4949
DALLAS 750 North St Paul Street suite 450 Dallas, TX 75201 P 800.469.4949
SEATTLE 506 2nd Avenue suite 2800 Seattle, WA 98104 P 800.469.4949

CONSULTANTS

KLH ENGINEERS
MECHANICAL/ELECTRICAL ENGINEERS
WWW.KLHENGRS.COM
LEXINGTON, KENTUCKY
LOUISVILLE, KENTUCKY
COLUMBUS, OHIO
NEW YORK, NEW YORK
1538 ALEXANDRIA PIKE, SUITE 11
FT. THOMAS, KENTUCKY 41075
800-354-9783 859-442-8050
859-442-8058 FAX

OWNER

Kroger

DATE	ISSUE
10/23/2018	90% OWNER REVIEW
11/01/2018	100% BID/PERMIT

# DATE	REVISION

PROJECT TITLE

KROGER STORE R543

MERCURY BLVD.
HAMPTON, VA

COMMISSION NO. 517315

ISSUE DATE 10/23/2018

SHEET TITLE

HVAC SECTIONS AND DETAILS

SHEET NO.

M3.2

©2017 Cole+Russell Architects, Inc.