# EXTERIOR LIGHTING FIXTURES

| TYPE | LAMP SIZE | VOLT. | DESCRIPTION | MIN. C.U. @ 80/50/20 @ Z.C. 5 | EQUALS BY |
|---|---|---|---|---|---|
| OA | 16W LED 1520 LUMENS | 277 | BETACALCO 32-2766-MB-VB WALL SCONCE W/ BRONZE FINISH, VERTICAL BAR, POYCARBONATE LENS, WET LABEL. MNT. AT 6' TO BOTTOM OR AS DIRECTED BY ARCHITECT. | | SHAPER, VISA ADVENT |
| OB | 18W LED 4000K | 277 | ECLIPSE RM533-LED30H-BZ RECESSED SQUARE WITH WHITE CAST ALUM. TRIM, POLY. PRISMATIC LENS, U.L. DAMP LABEL. | | DAY-BRITE, NU-ART, CGF, McGRAW |
| OC | 53W LED 4550 LUMENS | 277 | SPAULDING TRP-30L-4K-053-4-U-DB CAST ALUMINUM WALL MNT. FIXTURE W/ TYPE IV DIST, TEMP. GLASS LENS, BRONZE FINISH. | | GARDCO, LUMARK, VISIONAIRE, QL, LSI, WIDELIGHT,McGRAW |
| OJ | 174W, 80 LED 17740 DEL. LUMENS | 277 | U.S. ARCH. LIGHTING RZR PLED-III 80LED 700mA NW WITH TYPE III DISTRIBUTION, BRONZE FINISH, 30'-5" SQUARE ALUM. POLE WITH BRONZE FIN. ONE FIX. PER POLE. | | GARDCO, INVUE, LSI, LITHONIA BEACON, McGRAW |
| | | | | | |

NOTES:
1. FIXTURES USING F32T8/SPX41 LAMPS SHALL HAVE PROGRAM START, PARALLEL WIRED, ELECTRONIC MULTI VOLTAGE BALLASTS.
2. 10 DAY PRIOR APROVAL REQUIRED FOR ANY FIXTURE OR MANUFACTURER NOT LISTED ABOVE. SEE SPECIFICATIONS.
3. VERIFY EXACT COLOR OF ALL EXTERIOR FIXTURES WITH ARCHITECT PRIOR TO ORDERING ANY FIXTURES.

# THEATER LIGHTING FIXTURES

| TYPE | LAMP SIZE | VOLT. | DESCRIPTION | MIN. C.U. @ 80/50/20 @ Z.C. 5 | EQUALS BY |
|---|---|---|---|---|---|
| TA | 52W LED, 40K 6000 DEL. LUMENS | 120 | PATHWAY COVENTRY C68PLB79V-60-4K-M40-D8-6PLEDSCLPF FULLY DIMMABLE LED BLACK CYLINDER. PROVIDE WITH PENDANT LENGTHS REQUIRED TO MOUNT SO THAT BOTTOM OF FIXTURE IS EVEN WITH CLOUD. | | VANTAGE, INDY PRESCOLITE OMEGA |
| TA2 | 52W LED, 40K 6000 DEL. LUMENS | 120 | SAME AS TYPE 'TA' EXCEPT MOUNT SO THAT BOTTOM OF FIXTURE EXTENDS OUT OF OPENING IN ANGLED PROSCENIUM. CONFIRM EXACT MOUNTING HEIGHT WITH ARCHITECTURAL DETAIL. | | VANTAGE, INDY PRESCOLITE OMEGA |
| TB | 33W LED, 40K 2850 DEL. LUMENS | 120 | PATHWAY COVENTRY 6VLFL2X-3000-4K-D8-6VLEDMDSCLPF FULLY DIMMABLE 6" LED RECESSED FIXTURE W/ MEDIUM FLOOD DISTRIBUATION AND CLEAR SPECULAR REFLECTOR. | | VANTAGE, INDY PRESCOLITE OMEGA |
| TC | 14.6W LED, 40K 1500 DEL. LUMENS | 120 | PATHWAY COVENTRY 4VLFL2X-2000-4K-D8-4VLEDSCLPF FULLY DIMMABLE 4" LED RECESSED FIXTURE WITH CLEAR SPECULAR REFLECTOR. | | VANTAGE, INDY PRESCOLITE OMEGA |
| TD | 4-F32T8/SPX41 PS FLUOR. | 120 | METALUX 8TDMFN-232 EB81 8' CHAIN HUNG INDUSTRIAL W/ WIRE GUARD. HANG WITH BOTTOM 22' ABOVE STAGE FLOOR. | 0.54 | LIGHTOLIER, LITHONIA DAYBRITE, COLUMBIA |
| TE | 319W LED, 40K 29,800 LUMENS | 120 | AMETRIX ASYX-WM-L-6-1-U-L40-1-R-STD 20" WIDE ALUMINUM WALL SCONCE. COORDINATE WITH ARCH. ELEVATION FOR EXACT MOUNTING HEIGHT. COLOR TO BE CHOSEN BY THE ARCHITECT. | | |
| TF | 2-F32T8/SPX41 PS FLUOR. | 120 | PMC LIGHTING SPS-CD-FL-2T8-4-PBL-WHT-DIM PERIMETER COVE LIGHT WITH PARABOLIC LOUVERS & WHITE TRIM FLANGE. | | VANTAGE, PRESCOLITE, OMEGA |
| TG | 19W LED, 40K 1700 LUMENS | 120 | VISA OW1333-L40K-H-BRNZ 25" TALL X 8" WIDE WALL MOUNTED SCONCE. | | OMEGA, PRESCOLITE, HALO, LIGHTOLIER WINONA |
| TH | LED | 120 | BLUE LIGHTS SYSTEM - WALL MOUNTED PUCK. MOUNT AT 24"AFF. | | |

NOTES:
1. FIXTURES USING F32T8/SPX41 LAMPS SHALL HAVE PROGRAM START, PARALLEL WIRED, ELECTRONIC MULTI VOLTAGE BALLASTS.
2. 10 DAY PRIOR APROVAL REQUIRED FOR ANY FIXTURE OR MANUFACTURER NOT LISTED ABOVE. SEE SPECIFICATIONS.

# LIGHTING FIXTURES

| TYPE | LAMP SIZE | VOLT. | DESCRIPTION | MIN. C.U. @ 80/50/20 @ Z.C. 5 | EQUALS BY |
|---|---|---|---|---|---|
| A | 4 F32T8/SPX41ECO P. S. FLUOR. | 277 | COLUMBIA ST824-432G-FSAI9EP 2' X 4' LAY-IN TROFFER WITH WHITE STEEL DOOR, .156" ACRYLIC LENS & (2) BALLASTS | 0.51 | METALUX, FAIL-SAFE, LIGHTOLIER DAYBRITE, LITHONIA |
| A1 | | | SAME AS TYPE 'A' EXCEPT CONNECT CENTER BALLAST TO EMERGENCY CIRCUIT. | | |
| B | 3 F32T8/SPX41ECO P. S. FLUOR. | 277 | COLUMBIA ST824-332G-FSAI9EP 2' X 4' LAY-IN TROFFER WITH WHITE STEEL DOOR, .156" ACRYLIC LENS & (2) BALLASTS | 0.51 | METALUX, LIGHTOLIER DAYBRITE, LITHONIA |
| B1 | | | SAME AS TYPE 'B' EXCEPT CONNECT CENTER BALLAST TO EMERGENCY CIRCUIT. | | |
| C | 2 F32T8/SPX41ECO P. S. FLUOR. | 277 | COLUMBIA ST824-232G-FSAI9EP 2' X 4' LAY-IN TROFFER WITH WHITE STEEL DOOR, .156" ACRYLIC LENS | 0.53 | METALUX, LIGHTOLIER DAYBRITE, LITHONIA |
| D | 34W LED, 4000K, 4334 LUMENS, 80 CRI | 277 | COLUMBIA LJT24-40LWG-FSAI9-EDU-C388 2' X 4' LAY-IN TROFFER WITH WHITE STEEL DOOR, .156" ACRYLIC LENS. | 0.53 | METALUX, LIGHTOLIER DAYBRITE, LITHONIA |
| E | 2 F40/30BXSPX41 P. S. FLUOR. | 277 | COLUMBIA ST822-240TT-FSAI9-EP 2' X 2' LAY-IN TROFFER W/ WHITE STEEL DOOR, .156" ACRYLIC LENS | | METALUX, LIGHTOLIER DAYBRITE, LITHONIA |
| EX | | | EXISTING FIXTURE TO REMAIN | | |
| F | 2 F32T8/SPX41ECO P. S. FLUOR. | 277 | COLUMBIA VRM4-232-EP VANDAL RESISTANT WRAPAROUND SURFACE FIXTURE WITH POLYCARBONATE LENS, 16 GA. STEEL HOUSING, WHITE FINISH. | | METALUX,LIGHTOLIER KENNAL, LITHONIA, FAIL-SAFE |
| G | 2 F32T8/SPX41ECO P. S. FLUOR. | 277 | COLUMBIA CS4-232EP-CSWG4 4' STRIP WITH WGCUN WIRE GUARD. SURFACE MOUNT ON CEILING OR CHAIN HANG AT 10' AFF | | METALUX, FAIL-SAFE, LIGHTOLIER DAYBRITE, LITHONIA |
| H | 42W LED, 4000K, 5661 LUMENS, 80 CRI | 277 | COLUMBIA LCS4-40ML-EDU-CSWG4 4' STRIP WITH WIRE GUARD. SURFACE MOUNT ON CEILING OR CHAIN HANG AT 10' AFF. | | DAYBRITE, LSI, LIGHTOLIER, METALUX, LITHONIA |
| J | 38W LED, 3000K 1930 DEL. LUMENS | 120 | MODERN FORMS WS-3624 "LOFT" LED VANITY LIGHT. INSTALL ABOVE MIRROR AS COORDINATED WITH ARCHITECT. | | |
| K | 2 F32T8/SPX41ECO P. S. FLUOR. | 277 | COLUMBIA 4754-232-EP GASKETED WRAPAROUND SURFACE FIXTURE WITH POLYCARBONATE LENS, 16 GA. STEEL HOUSING, WHITE FINISH. | | METALUX,LIGHTOLIER KENNAL, LITHONIA, FAIL-SAFE |
| M1 | 240W LED, 4000K, 24,000 LUMENS | 277 | CREE CXB-A-UV-H-40K8-UL-1-CXBAI6N-WG-A HI BAY WITH SPUN ALUM REFLECT. & WIRE GRD. PENDANT MNT. FROM UNISTRUT B/W STRUCTURE SO BOTTOM OF FIXT. IS EVEN W/ BOTTOM OF JOISTS | | LITHONIA, PHILIPS |
| M2 | 160W LED, 4000K, 18,000 LUMENS | 277 | CREE CXB-A-UV-M-40K8-UL-1-CXBAI6N-WG-A HI BAY WITH SPUN ALUM REFLECT. & WIRE GRD. PENDANT MNT. FROM UNISTRUT B/W STRUCTURE SO BOTTOM OF FIXT. IS EVEN W/ BOTTOM OF JOISTS | | LITHONIA, PHILIPS |
| R | 34W LED, 4000K 3000 LUMENS | 277 | PORTFOLIO LD8A-530D010-ER8A65840-8LMOLI 8" DIA. RECESSED DOWNLIGHT WITH SPEC. ALZAK REFL., WHITE TRIM | 0.67 | LITHONIA(GOTHAM) PRESCOLITE, LIGHTOLIER OMEGA |
| S | 15W H.O. LED | 120 | LITHONIA OLVTMWM ENCLOSED FIXTURE WITH CAST GUARD. MOUNT ON WALL 36" ABOVE ELEVATOR PIT FLOOR | | R.A.L., G.E. SPECTRUM HUBBELL |
| U | 16W LED 1520 DEL. LUMENS | 277 | BETACALCO 32-2756-MS-VB WALL SCONCE W/ SILVER FINISH, VERTICAL BAR, POYCARBONATE LENS. MNT. AT 7' TO BOTTOM OR AS DIRECTED BY ARCHITECT. | | VISA, SHAPER OCL, ADVENT |
| V | 13.9W LED, 4000K 1100 LUMENS | 277 | PRESCOLITE LF6SL-DMI-6LFSL-11L-40K-FL35-WT DOWNLIGHT W/ SPEC. ALZAK REFLECTOR, WHITE TRIM FLANGE, | | OMEGA, INFINITY, PRESCOLITE, HALO, PORTFOLIO |
| V2 | 25.2W LED, 4000K 2000 LUMENS | 277 | PRESCOLITE LF6SL-DMI-6LFSL-20L-40K-FL35-WT DOWNLIGHT W/ SPEC. ALZAK REFLECTOR, WHITE TRIM FLANGE | - | OMEGA, INFINITY, PRESCOLITE, HALO, PORTFOLIO |
| W | 19W LED 1600 DEL. LUMENS | 277 | METALUX 2BCLED-LD4165LF-UNV-L840-CD 2' WRAP-AROUND W/ FROSTED ACRYLIC LENS, WALL MOUNT AS NOTED. | - | COLUMBIA, LIGHTOLIER DAYBRITE, LITHONIA |
| X1 | HIGH INTENSITY LED's | 277 | DUAL-LITE SESRBN CAST ALUM. SINGLE FACE EXIT WITH STENCIL FACE, RED LETTERS, WALL MOUNT AT 7'-9" AFF TO BOTTOM | - | LITHONIA, SURE-LITES, EMERGI-LITE, CHLORIDE, BEGHELLI |
| X2 | HIGH INTENSITY LED's | 277 | DUAL-LITE SESRBN CAST ALUM. SINGLE FACE EXIT WITH STENCIL FACE, RED LETTERS, CEILING MOUNTED | - | LITHONIA SURE-LITES, EMERGI-LITE, CHLORIDE, BEGHELLI |
| X3 | HIGH INTENSITY LED's | 277 | DUAL-LITE SEDRBN - SAME AS TYPE 'X2' EXCEPT WITH DOUBLE FACE | - | LITHONIA, SURE-LITES, EMERGI-LITE, CHLORIDE, BEGHELLI |
| Y | 2-1W LED LAMPS | 277 | DUAL-LITE EV2-1-V653 TWO HEAD EMERG. WALL PACK W/ VANDAL SHIELD, FRONT MNT. HEADS. MNT @ 8' AFF | | SURE-LITES, CHLORIDE, LITHONIA |

NOTES:
1. FIXTURES USING F32T8/SPX41 LAMPS SHALL HAVE PROGRAM START, PARALLEL WIRED, ELECTRONIC MULTI VOLTAGE BALLASTS.
2. 10 DAY PRIOR APROVAL REQUIRED FOR ANY FIXTURE OR MANUFACTURER NOT LISTED ABOVE. SEE SPECIFICATIONS.
3. VERIFY EXACT COLOR OF ALL SURFACE MOUNTER FIXTURES WITH ARCHITECT PRIOR TO ORDERING ANY FIXTURES.

# LIGHTING CONTACTOR SCHEDULE

| SYMBOL | TYPE | CONTACT RATING POLES | AMPERE | VOLTAGE | COIL VOLTAGE | BREAK CIRCUITS | MANUFACTURER & MODEL NO. |
|---|---|---|---|---|---|---|---|
| LC-1 | ELEC. HELD | 8 | 20A | 277 | 277 | HAL-1,2,3,4 | SQUARE D 8903 L680-V01 |
| LC-2 | ELEC. HELD | 8 | 20A | 277 | 277 | HBL-1,2,3,4,5 | SQUARE D 8903 L680-V01 |
| LC-3 | ELEC. HELD | 8 | 20A | 277 | 277 | HBL-6,7,8,9 | SQUARE D 8903 L680-V01 |
| LC-4 | ELEC. HELD | 8 | 20A | 277 | 277 | HCL-1,2,3,4 | SQUARE D 8903 L680-V01 |
| LC-5 | ELEC. HELD | 8 | 20A | 277 | 277 | HCL-5,6,7,8,9 | SQUARE D 8903 L680-V01 |
| LC-6 | ELEC. HELD | 8 | 20A | 277 | 277 | HDL-1,2,3,4,5,6,7 | SQUARE D 8903 L680-V01 |
| LC-7 | ELEC. HELD | 8 | 20A | 277 | 277 | HEL-1,2,3,4,5,6 | SQUARE D 8903 L680-V01 |

NOTES:
1. SEE DETAIL 5/E-6.11.
2. CONTACTORS SHALL BE FACTORY ORDERED WITH NORMALLY CLOSED CONTACTS.

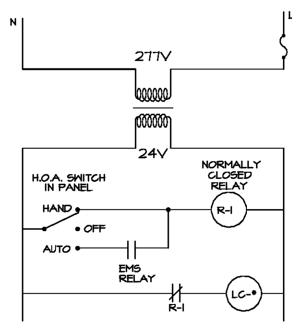


LIGHTING CONTACTORS SHALL BE SQUARE D 8903 SERIES AS SCHEDULED, 277V, NORMALLY CLOSED CONTACTS, ELECTRICALLY HELD LIGHTING CONTACTOR. PROVIDE NEMA 1 ENCLOSURE. MOUNT CONTACTOR ON WALL AT APPROX. 48" AFF ADJACENT TO LIGHTING PANEL SERVED. BREAK LIGHTING CIRCUITS (SEE SCHEDULE) THRU CONTACTS. INSTALL LAMINATED PLASTIC NAMEPLATE ON COVER WITH CONTACTOR NAME (i.e. "LC-1", "LC-2", etc.)

RELAY R-1 SHALL BE PILOT DUTY WITH NORMALLY CLOSED CONTACTS AND 24V COIL.

MOUNT EMS RELAY ON WALL AT APPROX. 48" AFF OUTSIDE OF CONTACTOR, WHERE LED STATUS INDICATOR IS READILY VISIBLE.

SWITCH ON RELAY MUST BE LABELED HAND/OFF/AUTO CORRESPONDING TO THE CORRECT POSITIONS OF THE SWITCH.

5 / E6.11 LIGHTING CONTACTOR WIRING DIAGRAM
SCHEMATIC ONLY

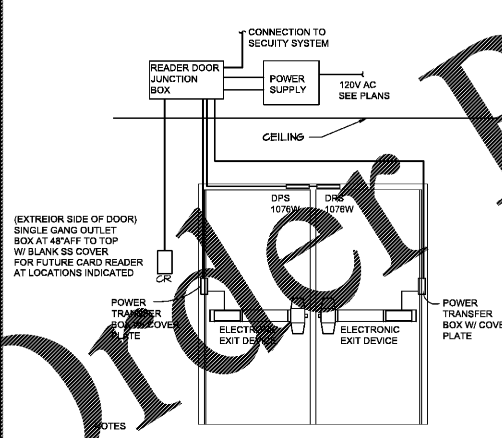


NOTES
1. COORDINATE LOCATIONS WITH SECURITY CONTRACTOR.
2. HOLLOW METAL MANUFACTURER TO PROVIDE GROUT BOXES W/ CONDUIT FITTINGS FOR ALL ELECTRONIC COMPONENTS MOUNTED IN THE FRAME.
3. ALL CONDUIT TO BE PROVIDED AND INSTALLED BY THE ELECTRICAL CONTRACTOR.
4. ALL CONDUIT SHALL BE 1/2" UNLESS OTHERWISE NOTED.

4 / E6.11 ACCESS CONTROL DIAGRAM
SCHEMATIC ONLY

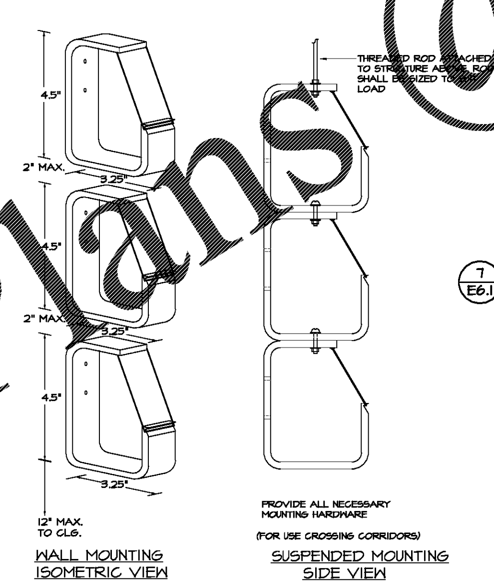


MONO-SYSTEMS, INC. MODELS H-433-S STEEL CABLE HANGERS. MOUNT ON STUD/WALL AS SHOWN.

INTERCOM CABLING CABLING SHALL BE RUN IN MIDDLE CABLE HANGER

LOW VOLTAGE SYSTEM CABLING INCLUDING EMS SYSTEM , SECURITY/CCTV SYSTEMS AND FIRE ALARM CABLING, SHALL BE RUN IN UPPER CABLE HANGER.

DATA CABLING SHALL BE RUN IN LOWER CABLE HANGER.

HANGERS SHALL BE MOUNTED 3' ON CENTER ALONG ENTIRE LENGTH OF HOMERUNS. WHERE SINGLE CABLES CROSS CORRIDOR, SUSPEND FROM STRUCTURE USING PLENUM RATED CABLE TIES.

3 / E6.11 CABLE HANGER DETAIL
NO SCALE

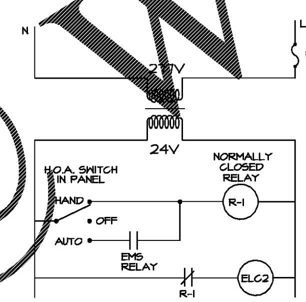


LIGHTING CONTACTOR 'ELC2' SHALL BE SQUARE D 8903 L660-V01 277V, 6 POLE, NORMALLY CLOSED CONTACTS, ELECTRICALLY HELD LIGHTING CONTACTOR. PROVIDE 24V CONTROL TRANSFORMER AND NEMA 1 ENCLOSURE. BREAK CIRCUIT EH-1 THRU CONTACTS. INSTALL LAMINATED PLASTIC NAMEPLATE ON COVER READING "EMERGENCY LIGHTING CONTACTOR"

RELAY R-1 SHALL BE PILOT DUTY WITH NORMALLY CLOSED CONTACTS AND 24V COIL.

7 / E6.11 EMERGENCY LIGHTING CONTACTOR ELC2 CONTROL WIRING DIAGRAM
SCHEMATIC ONLY

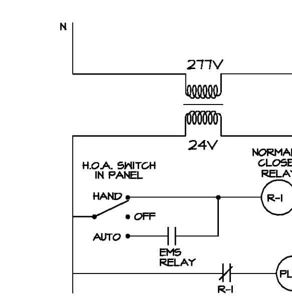


LIGHTING CONTACTOR 'PLC2' SHALL BE SQUARE D 8903 L630-V01 277V, 3 POLE, NORMALLY CLOSED CONTACTS, ELECTRICALLY HELD LIGHTING CONTACTOR. PROVIDE 24V CONTROL TRANSFORMER AND NEMA 1 ENCLOSURE. BREAK CIRCUIT HM-1 THRU CONTACTS. INSTALL LAMINATED PLASTIC NAMEPLATE ON COVER READING "POLE LIGHTING CONTACTOR"

RELAY R-1 SHALL BE PILOT DUTY WITH NORMALLY CLOSED CONTACTS AND 24V COIL.

6 / E6.11 POLE LIGHTING CONTACTOR PLC2 CONTROL WIRING DIAGRAM
SCHEMATIC ONLY

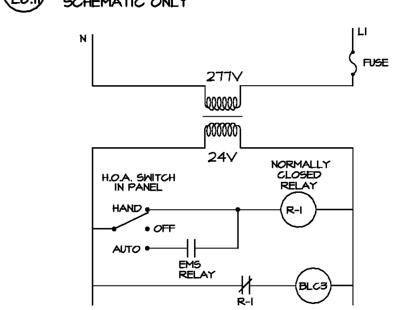


LIGHTING CONTACTOR 'BLC3' SHALL BE SQUARE D 8903 L630-V01 277V, 3 POLE, NORMALLY CLOSED CONTACTS, ELECTRICALLY HELD LIGHTING CONTACTOR. PROVIDE 24V CONTROL TRANSFORMER AND NEMA 1 ENCLOSURE. BREAK CIRCUIT EH-7,8,9 THRU CONTACTS. INSTALL LAMINATED PLASTIC NAMEPLATE ON COVER READING "BUILDING MOUNTED OUTSIDE LIGHTING CONTACTOR"

RELAY R-1 SHALL BE PILOT DUTY WITH NORMALLY CLOSED CONTACTS AND 24V COIL.

2 / E6.11 BUILDING LIGHTING CONTACTOR BLC3 CONTROL WIRING DIAGRAM
SCHEMATIC ONLY

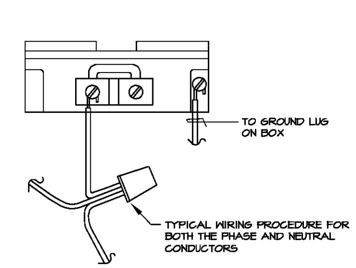


1 / E6.11 TYPICAL MULTIWIRE BRANCH CIRCUIT RECEPTACLE DETAIL
NOT TO SCALE

# LEGEND

| SYMBOL | DESCRIPTION | MNT'G HGT TO TOP |
|---|---|---|
| | CEILING MOUNTED FLUORESCENT FIXTURE | |
| | SOLID DOT INDICATES FIXTURE ON EMERGENCY CIRCUIT | |
| | DASHED INDICATES FIXTURE TO BE REMOVED OR RELOCATED | |
| | CEILING MOUNTED INCANDESCENT OR H.I.D. FIXTURE | |
| | WALL MOUNTED INCANDESCENT OR H.I.D. FIXTURE | |
| | EXIT LIGHT - ARROWS AS INDICATED | |
| | WALL MOUNTED EXIT LIGHT - ARROWS AS INDICATED | 102" *** |
| | JUNCTION BOX IN WALL | 20" ** |
| | JUNCTION BOX AT OR ABOVE CEILING OR IN FLOOR AS INDICATED | |
| $ | SINGLE POLE SWITCH 15A-120/277V HUBBELL 1201-I | 48" |
| $3 | 3-WAY SWITCH 15A-120/277V HUBBELL 1203-I | 48" |
| $4 | 4-WAY SWITCH 15A-120/277V HUBBELL 1204-I | 48" |
| $K | KEY OPERATED SWITCH 15A-120/277V HUBBELL 1201-L | 48" |
| $K3 | KEY OPERATED 3-WAY SWITCH 15A-120/277V HUBBELL 1203-L | 48" |
| $TS | ELECTRONIC ADJUSTABLE TIMER WALL SWITCH 10A-277V-WATTSTOPPER TS-400-I | 48" |
| $TS3 | 3-WAY WIRED ADJUSTABLE TIMER WALL SWITCH 10A-277V-WATTSTOPPER TS-400-I | 48" |
| $OS | OCCUPANCY SENSOR WALL SWITCH 10A-277V-WATTSTOPPER PW-100 | 48" |
| $OS3 | 3 WAY OCCUPANCY SENSOR WALL SWITCH 10A-277V-WATTSTOPPER PW-103-N-I | 48" |
| $T1 | INTERVAL TIMER MARKTIME 90.008 0-60 MIN. 20A-125V | 48" |
| $T2 | INTERVAL TIMER MARKTIME 90.007 0-6 HR. 20A-125V | 48" |
| $M | MOTOR RATED SWITCH 20A-120/277V HUBBELL HBL1290 ENCLOSURE FOR LOCKOUT | 48" |
| $R/L | RAISE-LOWER SWITCH FURNISHED WITH EQUIPMENT CONTROLLED | 48" |
| | CEILING MOUNTED OCCUPANCY SENSOR - 360° | |
| | CEILING MOUNTED OCCUPANCY SENSOR - DIRECTIONAL | |
| LR | OCCUPANCY SENSOR RELAY ABOVE CEILING | |
| | MASTER DIMMER CONTROL STATION | 48" |
| | SINGLE DIMMER CONTROL STATION | 48" |
| | BY-PASS DIMMER CONTROL STATION | 48" |
| | GROUND FAULT CIRCUIT GUARD 20A-125V HUBBELL GFBF20ILA | 72" |
| | GROUNDED DUPLEX RECEPTACLE 15A-125V HUBBELL HBL5252-I | 20" |
| | RECEPTACLE MOUNTED ABOVE COUNTER TOP | 48" |
| | COMPUTER RECEPTACLE PROVIDED AND INSTALLED BY DIVISION 17000 CONTRACTOR | 20" |
| | RECEPTACLE ON GENERATOR W/ RED FACE 15A-125V HUBBELL HBL5252R | 20" |
| | GROUND FAULT INTERRUPTING RECEPTACLE 20A-125V HUBBELL GF-53621 | 20" |
| | GROUNDED DUPLEX RECEPTACLE 20A-125V HUBBELL HBL5352-I | 20" |
| | RECEPTACLE 20A-125V HUBBELL HBL5351-I | 20" |
| | RECEPTACLE 30A-125V HUBBELL 9308 | 20" |
| | RECEPTACLE WITH HUBBELL HBL5221 WEATHER-PROOF COVER | 20" |
| GFI WP | GFI RECEPTACLE WITH HUBBELL WP26M WEATHER-PROOF COVER FOR EXTERIOR | 24" ** |
| GFI WP | GFI RECEPTACLE WITH HUBBELL WP26 WEATHER-PROOF COVER | 20" ** |
| E | 'E' INDICATES EXISTING DEVICE TO REMAIN | |
| | DASHED INDICATES DEVICE TO BE REMOVED | |
| | RECEPTACLE OR OUTLET INSTALLED ON CONDUIT STUB - SEE DETAIL | |
| | TWO DUPLEX RECEPTACLES WITH TWO GANG COVER | 20" |
| | WIRELESS WALL CLOCK, BATTERY POWERED | 92" |
| SD | SINGLE DIAL WIRELESS WALL CLOCK, 120 VOLT | 100" |
| DD | DOUBLE DIAL WIRELESS WALL CLOCK, 120 VOLT | 100" ** |
| 20 | RECEPTACLE 20A-125/250V HUBBELL 8410 | 20" |
| 20T | RECEPTACLE 20A-125/250V TWIST-LOCK HUBBELL HBL2410 | |
| 20A | RECEPTACLE 20A-250V HUBBELL 5461-I | 20" |
| 30 | DRYER OUTLET 30A-125/250V HUBBELL 9430 | |
| 30T | RECEPTACLE 30A-250V HUBBELL HBL2620 TWIST-LOCK | 20" |
| 30A | RECEPTACLE 30A-250V HUBBELL 9330 | 20" |
| 50 | RANGE OUTLET 50A-125/250V HUBBELL 9450 | 20" |
| 50A | KILN OUTLET 50A-250V HUBBELL 9367 | 20" |
| | TELEPHONE WALL OUTLET W/ ¾"C UP IN WALL AND TURNED OUT ABOVE CEILING | 20" |
| | TELEPHONE WALL OUTLET FOR WALL PHONE | 48" |
| | DATA WALL OUTLET W/ ¾"C UP IN WALL AND TURNED OUT ABOVE CEILING | 20" |
| | TEACHER DATA/TELEPHONE WALL OUTLET - SEE DETAIL 2/E-2.12 | 20" ** |
| | FLUSH FIRE ALARM PULL STATION | 48" |
| | FLUSH FIRE ALARM HORN / STROBE LIGHT | 88" |
| ELR | FLUSH FIRE ALARM STROBE LIGHT ONLY. ELR INDICATES END OF LINE RESISTOR | 88" |
| WP | WEATHER PROOF FLUSH EXTERIOR FIRE ALARM HORN | 120" ** |
| | SMOKE DETECTOR IN CEILING | |
| | DUCT MOUNTED SMOKE DETECTOR | |
| | WALL MOUNTED MAGNETIC DOOR HOLDER | 72" |
| CO | CARBON MONOXIDE DETECTOR, CEILING MOUNTED | |
| | HEAT DETECTOR, CEILING MOUNTED | |
| | FIRE ALARM EXTENDER PANELS | 60" |
| | TV WALL OUTLET W/ ¾"C UP IN WALL AND TURNED OUT ABOVE CEILING | 80" ** |
| | CEILING MOUNTED SPEAKER | |
| G | 'G' INDICATES SPEAKER INSTALLED IN HARD CEILING | |
| | PENDANT MOUNTED SPEAKER | |
| | WALL MOUNTED SPEAKER | 94" |
| WP | WEATHERPROOF EXTERIOR WALL MOUNTED SPEAKER | 120" ** |
| | INTERCOM CALL BUTTON | 48" |
| | MICROPHONE WALL OUTLET | 20" |
| | SPEAKER VOLUME CONTROL | 48" |
| 30/2 | NON-FUSED DISCONNECT SWITCH-30/2 INDICATES 30A, 2 POLE SWITCH | 72" # |
| 60/3/40 | FUSED DISCONNECT SWITCH - 60/3/40 INDICATES 60A, 3 POLE SWITCH W/ 40A FUSES | 72" # |
| | ELECTRICAL PANELBOARD | 72" |
| | MAGNETIC MOTOR STARTER - SEE MECHANICAL | 72" |
| | PUSH BUTTON STOP/START - SEE MECHANICAL | 48" |
| | MOTOR OPERATED DAMPER - SEE MECH. | |
| R | RELAY - SEE MECHANICAL | |
| | THERMOSTAT WALL OUTLET W/ ½"C UP IN WALL AND TURNED OUT ABOVE CEILING | 48" |
| | HUMIDISTAT WALL OUTLET W/ ½"C UP IN WALL AND TURNED OUT ABOVE CEILING | 48" |
| | T'STAT/H'STAT WALL OUTLETS 3" APART W/ ½" NIPPLE BETWEEN & ONE ½"C UP IN WALL | 48" |
| | FRACTIONAL HORSEPOWER MOTOR | |
| | MOTOR - HORSEPOWER AS INDICATED | |
| AFF | ABOVE FINISHED FLOOR | |
| AFG | ABOVE FINISHED GRADE | |
| RSC | RIGID STEEL CONDUIT | |
| RT | RAINTIGHT ENCLOSURE, NEMA 3R | |
| | CONDUIT CONCEALED IN WALL OR ABOVE CEILING | |
| | CONDUIT CONCEALED UNDERGROUND OR BELOW ELEVATED FLOOR | |
| | CONDUIT EXPOSED AT CEILING, CONCEALED IN WALLS | |
| | ARROWS INDICATE HOMERUN TO PANEL | |
| | CROSSMARKS INDICATE NO. OF CONDUCTORS, DOT INDICATES GROUND WIRE (2#12 MIN.) | |
| | EXISTING CONDUIT TO REMAIN | |
| | EXISTING CONDUIT TO BE REMOVED | |

\# = 36" AFG TO BOTTOM WHEN INSTALLED ON EXTERIOR OF BUILDING
** = OR AS NOTED ON PLANS
*** = OR AS DIRECTED BY ARCHITECT

1802


Architecture Planning Facilitation Design
CGLS ARCHITECTS
CHAPMAN GRIFFIN LANIER SUSSENBACH ARCHITECTS, INC
©



THIS DRAWING, THE DIMENSIONS OF WHICH ARE 30" X 42", IS THE PROPERTY OF CHAPMAN GRIFFIN LANIER SUSSENBACH ARCHITECTS, INC. AND MAY NOT BE USED OR REPRODUCED WITHOUT THEIR WRITTEN PERMISSION.


RELEASED FOR CONSTRUCTION


CONSULTANT
SPURLOCK ASSOCIATES, INC
2970 Clairmont Rd., Suite 620
Atlanta, GA 30329
P: 404.633.0245
F: 404.633.1756


SEAL
GEORGIA REGISTERED No. 8460 PROFESSIONAL ENGINEER BARRY V. SPURLOCK

| DATE | NO. | DESCRIPTION |
|---|---|---|
| 03/27/18 | | GDOE PRELIMINARY SUBMITTAL / DESIGN DEVELOPMENT |
| 06/19/18 | | 50% CONSTRUCTION DOCUMENTS |
| 09/17/18 | | GDOE CHECK-SET/ PERMIT SET |
| 10/10/18 | | FINAL GDOE SUBMITTAL |
| 11/01/18 | | ISSUED FOR PROPOSALS |


CHAPMAN GRIFFIN LANIER SUSSENBACH ARCHITECTS
400 Galleria Pkwy. • Suite 100 • Atlanta, Georgia 30339 • Phone: 404.733.5493 • Fax: 404.733.6804


DOE FACILITY CODE: 660 -3066
RIVERWOOD HIGH SCHOOL-PHASE 3-8
AUDITORIUM / GYMNASIUM ADDITION
5900 RAIDER DRIVE NW SANDY SPRINGS, GA 30328
FULTON COUNTY SCHOOLS RFP NO. 411-19

SHEET TITLE
ELECTRICAL SCHEDULES & DETAILS

PROJECT NO. 16015.02
DATE 09/17/18
DRAWN BY: G.T.R.
CHECKED BY: B.L.S.
SHEET NO. E-6.11


Order Plans @ www.LDLine.com