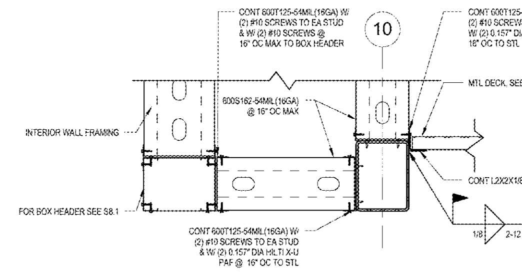

11 TOWER SIDE FRAMING SECTION
S5 1 1/2" = 1'-0"

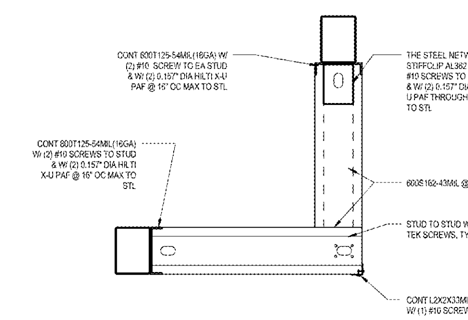

10 CORNER SOFFIT DETAIL
S5 1" = 1'-0"

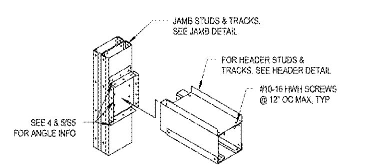

9 HEADER CONNECTION
S5 1/2" = 1'-0"

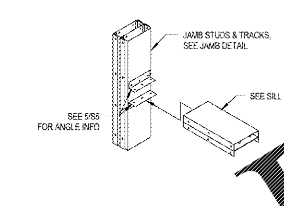

8 SILL CONNECTION TO JAMB
S5 1/2" = 1'-0"

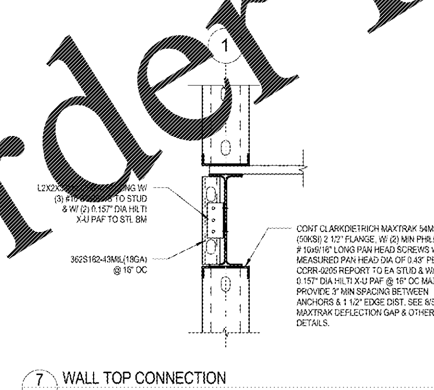

7 WALL TOP CONNECTION
S5 1" = 1'-0"

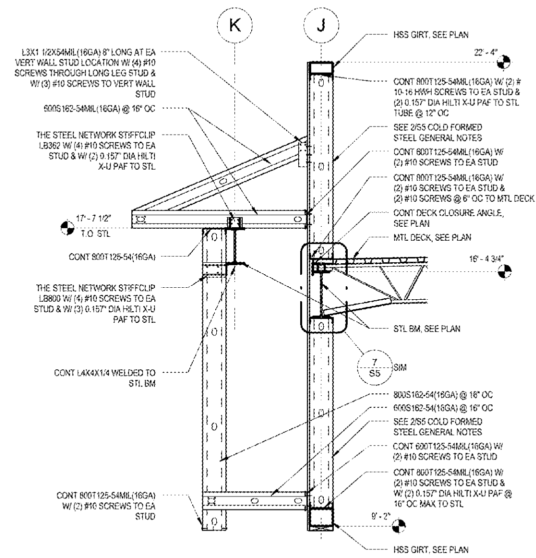

6 WALL SECTION
S5 1/2" = 1'-0"

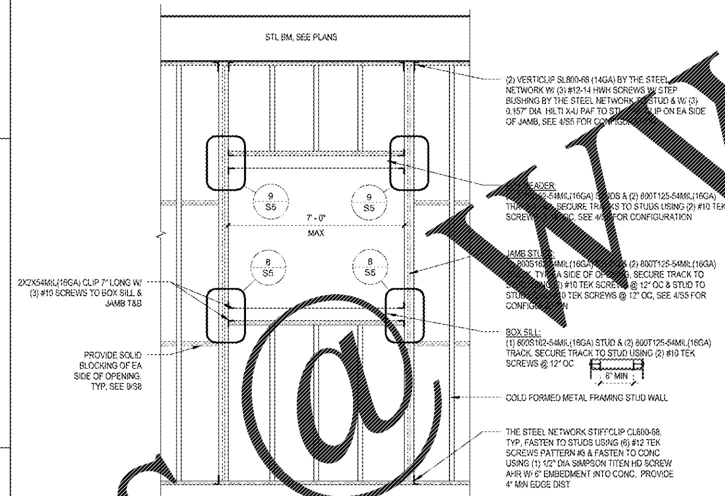

5 LIGHT GAUGE OPENING
S5 1/2" = 1'-0"

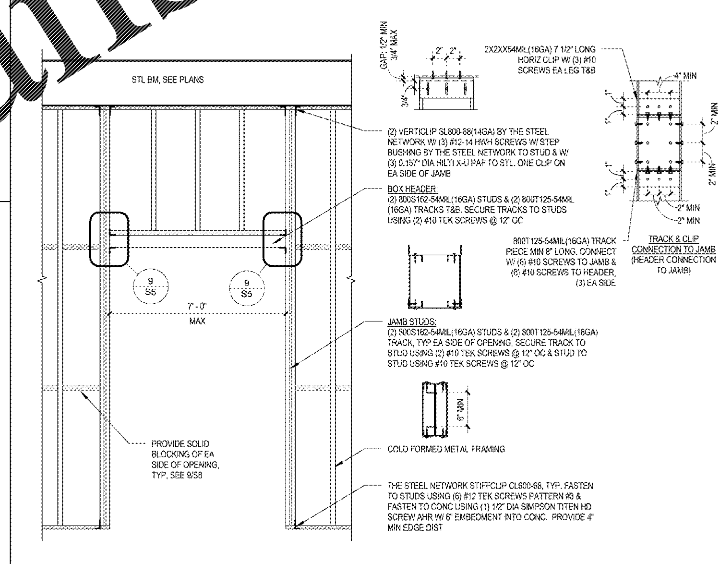

4 TYP LIGHT GAUGE DOOR OPENING
S5 1/2" = 1'-0"

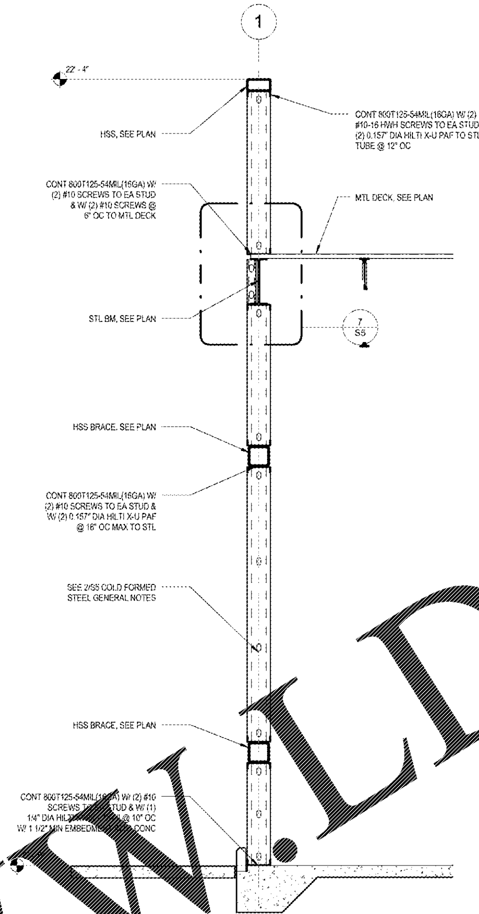

3 SIDE WALL SECTION
S5 1/2" = 1'-0"

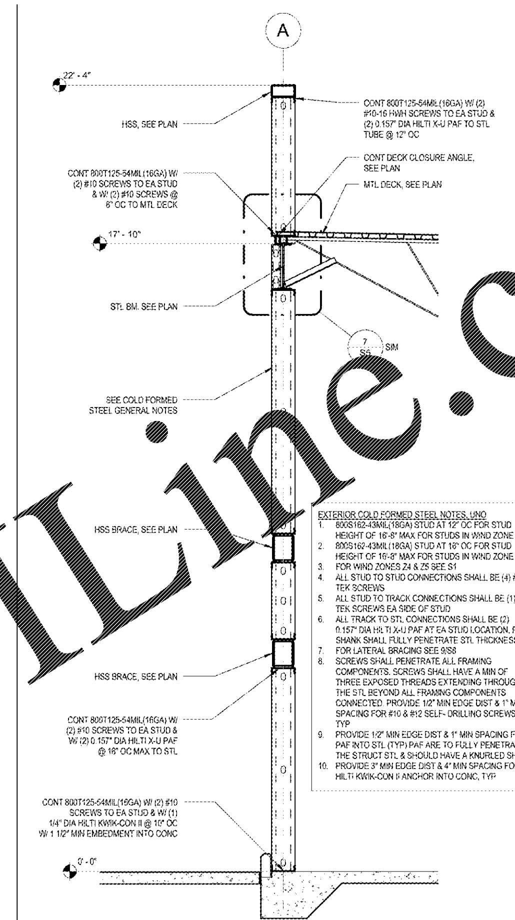

EXTERIOR COLD FORMED STEEL NOTES, UNO

1. 800S162-43MIL(18GA) STUD AT 12" OC FOR STUD HEIGHT OF 16'-8" MAX FOR STUDS IN WIND ZONE Z5
2. 800S162-43MIL(18GA) STUD AT 16" OC FOR STUD HEIGHT OF 16'-8" MAX FOR STUDS IN WIND ZONE Z4
3. FOR WIND ZONES Z4 & Z5 SEE S1
4. ALL STUD TO STUD CONNECTIONS SHALL BE (4) #10 TEK SCREWS
5. ALL STUD TO TRACK CONNECTIONS SHALL BE (1) #10 TEK SCREWS EA SIDE OF STUD
6. ALL TRACK TO STL CONNECTIONS SHALL BE (2) 0.157" DIA HILTI X-U PAF AT EA STUD LOCATION. PAF SHANK SHALL FULLY PENETRATE STL THICKNESS
7. FOR LATERAL BRACING SEE 9/S8
8. SCREWS SHALL PENETRATE ALL FRAMING COMPONENTS. SCREWS SHALL HAVE A MIN OF THREE EXPOSED THREADS EXTENDING THROUGH THE STL BEYOND ALL FRAMING COMPONENTS CONNECTED. PROVIDE 1/2" MIN EDGE DIST & 1" MIN SPACING FOR #10 & #12 SELF- DRILLING SCREWS, TYP
9. PROVIDE 1/2" MIN EDGE DIST & 1" MIN SPACING FOR PAF INTO STL (TYP) PAF ARE TO FULLY PENETRATE THE STRUCT STL & SHOULD HAVE A KNURLED SHANK
10. PROVIDE 3" MIN EDGE DIST & 4" MIN SPACING FOR HILTI KWIK-CON II ANCHOR INTO CONC, TYP

2 FRONT AND REAR WALL SECTION
S5 1/2" = 1'-0"

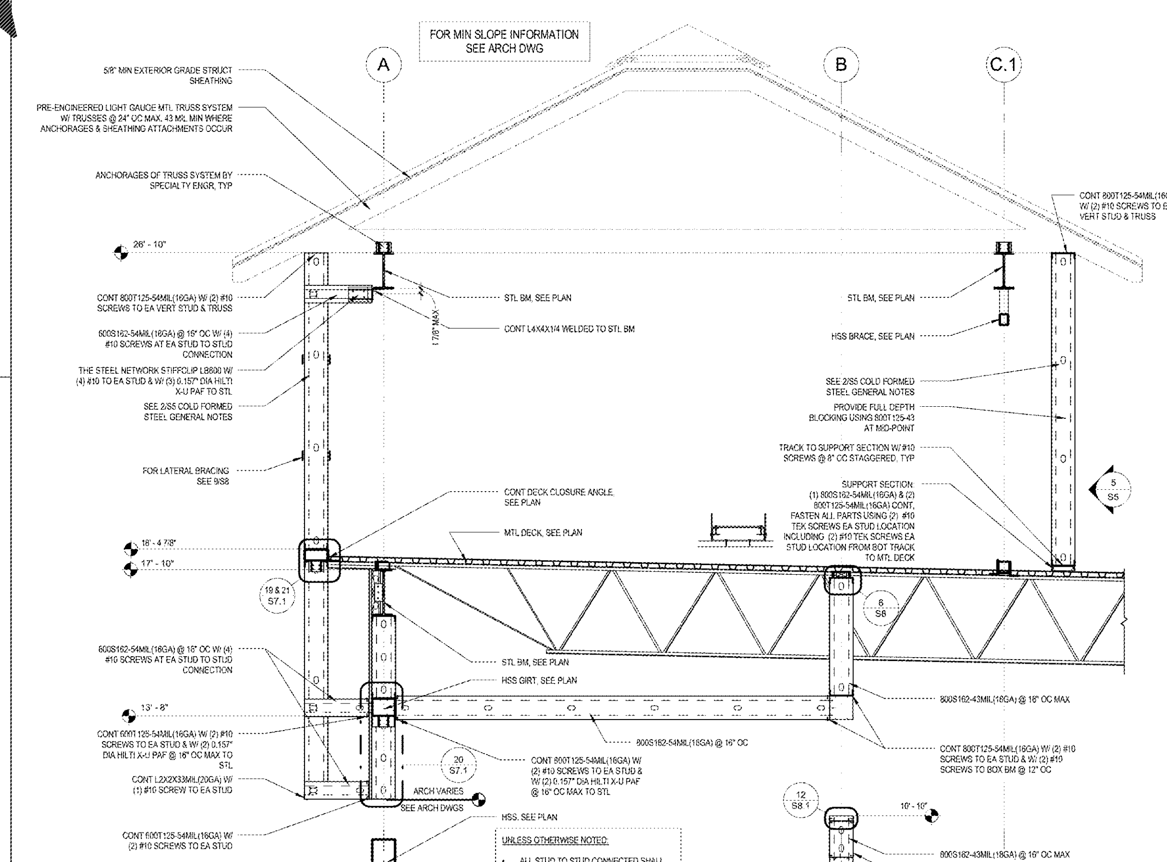

UNLESS OTHERWISE NOTED:

- ALL STUD TO STUD CONNECTED SHALL BE (4) #10 TEK SCREWS
- ALL STUD TO TRACK SHALL BE CONNECTED W/ (1) #10 TEK SCREW EA SIDE OF STUD
- ALL TRACK TO STEEL CONNECTIONS SHALL BE (2) 0.157" DIA HILTI X-U PAF AT EA STUD LOCATION. PAF SHANK SHALL FULLY PENETRATE STL THICKNESS
- FOR LATERAL BRACING SEE 9/S8

1 WALL SECTION
S5 1/2" = 1'-0"

Cuhaci & Peterson
Architects Engineers Planners
FL Corporate Certificate #AA C000926
1925 Prospect Avenue Orlando, FL 32814
Ph. 407-661-9100 Fax 407-661-9101 www.c-p.com

CLIENT NAME
WAWA
260 WEST BALTIMORE PIKE
WAWA, PENNSYLVANIA 19063

PROJECT NAME
WAWA F85FB 2018.01 STORE #5275-LIT
9021 STATE ROAD 52
HUDSON, FL 34669

SHEET TITLE
WALL SECTIONS

Revision Schedule

No.	Description	Date
	PERMIT SET	03/21/2017
	PRE-BID REVIEW SET	08/29/2018
A	REV 2018.01	09/19/2018
	BID SET	09/18/2018

PROJECT NO. 2161082
DATE 03-21-2017
DRAWN RC
CHECKED JJ

S5

COPYRIGHT: All rights reserved. Any use or reproduction of this document without written permission from C&P is a violation of federal copyright laws.

Order Plans @ WWW.LDILine.com