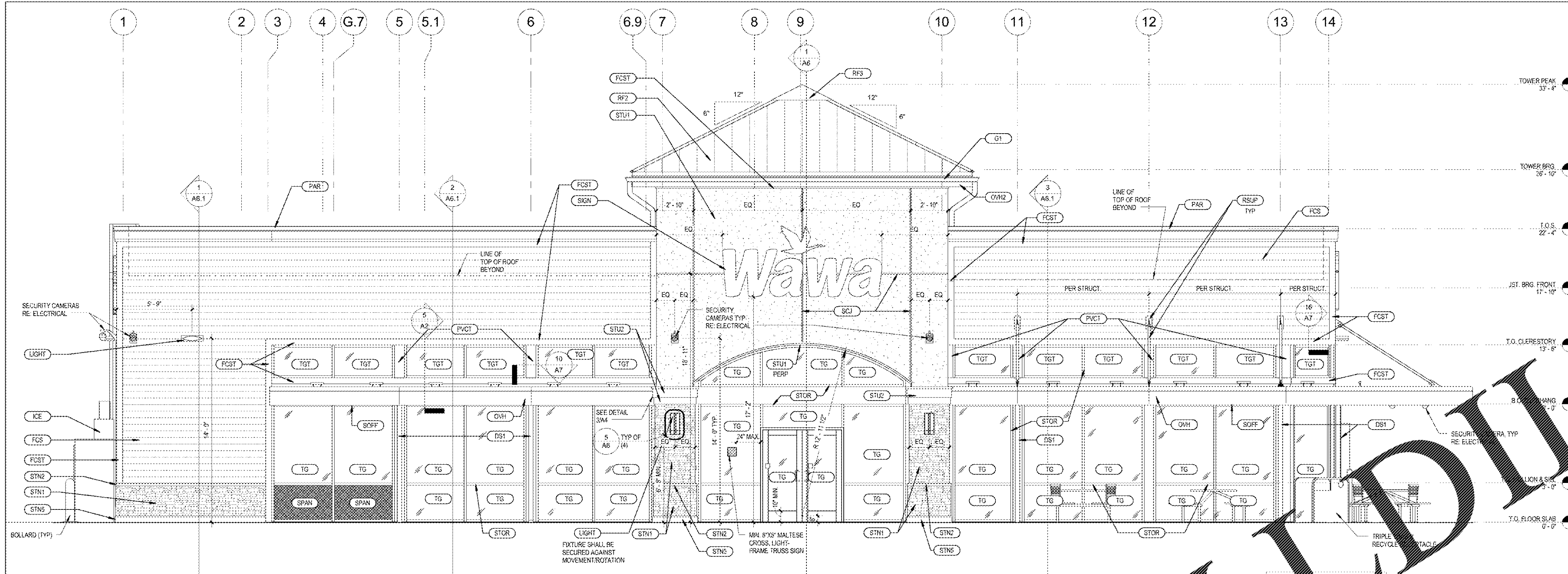

1 FRONT ELEVATION
1/4" = 1'-0"

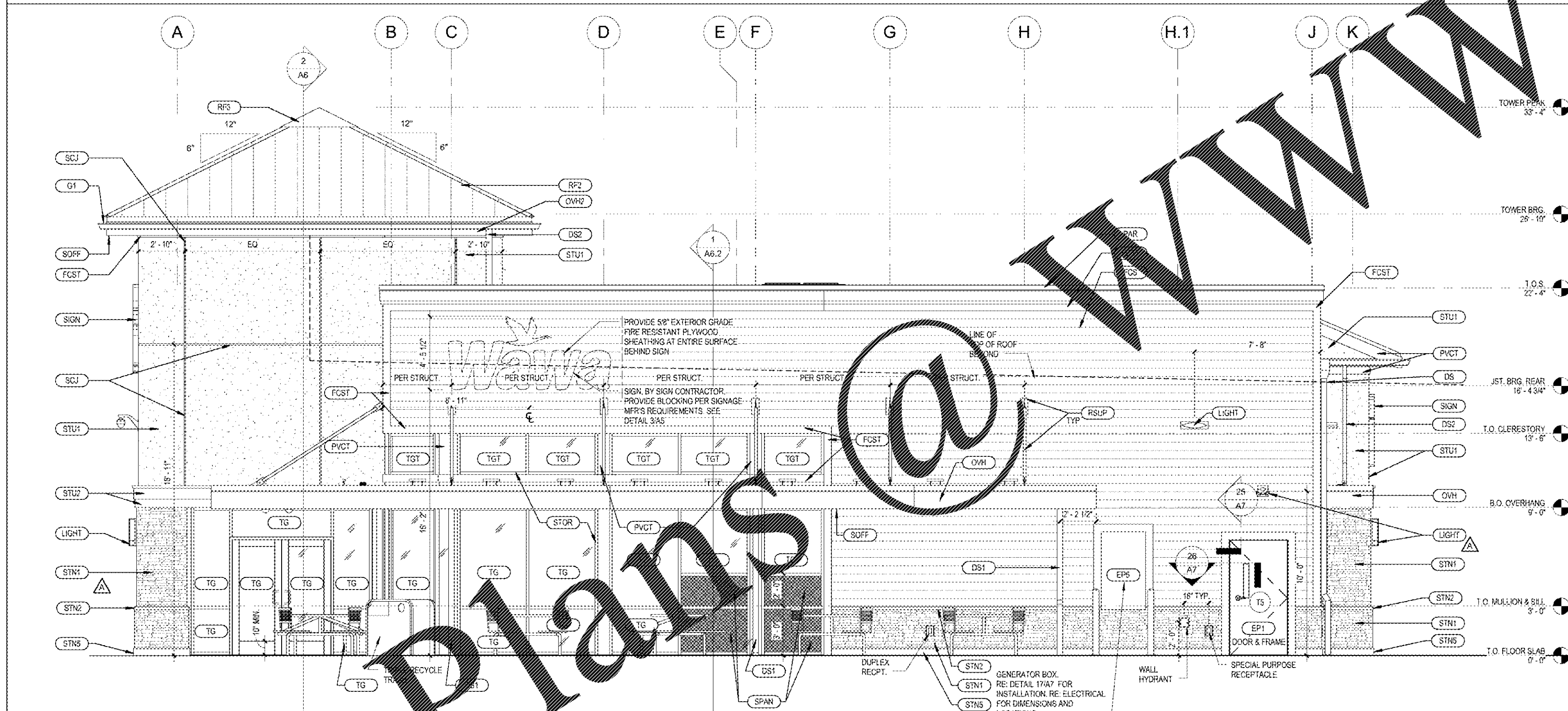

2 RIGHT ELEVATION
1/4" = 1'-0"

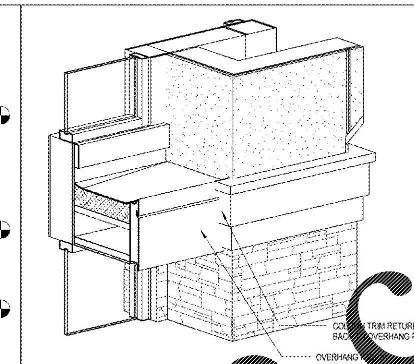

3 COLUMN TRIM RETURNED AT OVERHANG

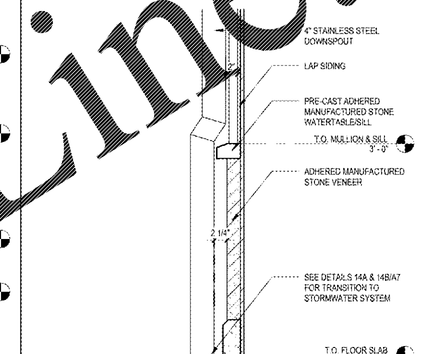

4 DOWNSPOUT AT WATERTABLE
1" = 1'-0"

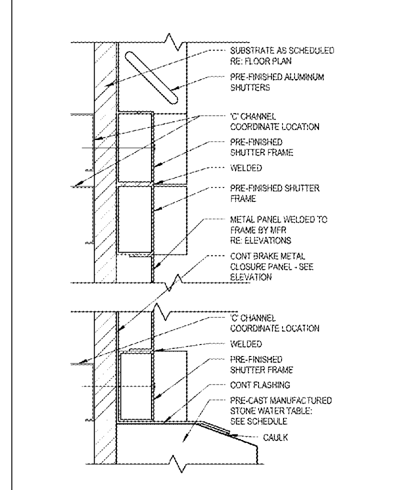

5 METAL PANEL UNDER SHUTTER
6" = 1'-0"

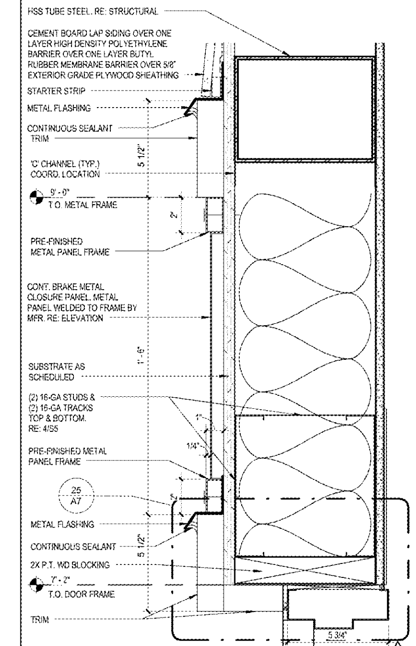

6 METAL PANEL DETAIL
3" = 1'-0"

GENERAL NOTES

1. ALL BLOCKING @ HARDIE FOR LIGHTS, SECURITY ITEMS. SEE DETAIL 18/A7.
2. MOUNT SECURITY CAMERAS THE SAME HEIGHT AS THE EXTERIOR WALL FIXTURE.
3. PROVIDE 6" X 8" ELECTRICAL BOX STONE TRIM BY BOULDER CREEK, COLOR ANTIQUE TAN AT ALL EXTERIOR ELECTRICAL RECEPTACLES MOUNTED ON STONE. SEE DETAIL 8/A4.
4. PETERSEN PAC-CLAD IS AN ACCEPTABLE ALTERNATE MFR. FOR PRODUCTS WHERE "ATAS" IS SPECIFIED. PROVIDE EQUAL OR BETTER QUALITY PRODUCTS. SUBMIT PRODUCT DATA TO ARCHITECT FOR APPROVAL.

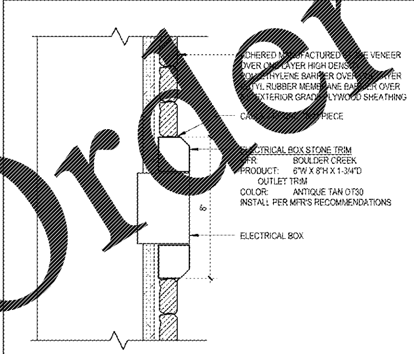

8 ELECT. BOX DETAIL @ STONE, TYP.
3" = 1'-0"

1. SYMBOL SHALL BE PLACED WITHIN 24" TO THE LEFT OF MAIN ENTRY DOOR.
2. PERMANENTY ATTACH TO FACE OF STRUCTURE ON CONTRASTING BACKGROUND.
3. BOTTOM OF SIGN 48" MIN. A.F.F. TOP OF SIGN 72" MAX A.F.F
4. AS PER 69A-60.0081

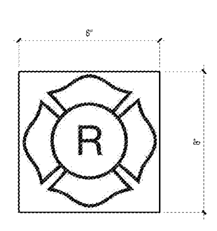

7 LIGHT-FRAME TRUSS-TYPE CONSTRUCTION SIGN
3" = 1'-0"

ARCHITECTURAL - EXTERIOR FINISH SCHEDULE

SYMBOL	MATERIAL	MANUFACTURER	COLOR	NOTES
C02	C02 FILL BOX WITH PVC SLEEVE THRU WALL	SUPPLIER		SEE A1 FOR LOCATION AND MOUNTING DETAIL, 18/A7 (SIM.)
DS	STAINLESS STEEL THRUWALL SCUPPER & COLLECTOR AND 4" DIA. STAINLESS STEEL DOWNSPOUT	ATAS INTERNATIONAL INC.	NATURAL MILL FINISH	COORDINATE WITH CIVIL FOR CONNECTION TO STORM SEWER. SEE DETAIL 14A & 14B/A7. ALTERNATE : PETERSEN PAC CLAD
DS1	4" DIA. STAINLESS STEEL DOWNSPOUT. REFER TO SPECS FOR GAUGE	ATAS INTERNATIONAL INC.	NATURAL MILL FINISH (A)	COORDINATE WITH CIVIL FOR CONNECTION TO STORM SEWER. SEE DETAIL 14A & 14B/A7. ALTERNATE : PETERSEN PAC CLAD
DS2	4" DIA. ALUM. DOWNSPOUT	ATAS INTERNATIONAL INC.	.032 POLISHED ALUMINUM W/ CLEAR ANODIZED FINISH	ALTERNATE : PETERSEN PAC CLAD
EP1	PAINT	BENJAMIN MOORE	COLOR: WHITE DIAMOND 2121-60 FINISH: EGGSHELL	DOOR & FRAME
EP6	PAINT	BENJAMIN MOORE	COLOR: WESTMINSTER GOLD #200, FINISH: SEMI-GLOSS	
FCS	"ARTISAN" PLANK LAP SIDING	JAMES HARDIE	TO BE DETERMINED, FINISH: SMOOTH, 8.25" X 12' (A)	PRE-FINSHED, PROVIDE COLOR-MATCHED CAULK BY JAMES HARDIE
FCST	"ARTISAN" ACCENT TRIM	JAMES HARDIE	ARTIC WHITE, FINISH: SMOOTH, 1.5" TH x 6" W x 10'-0" L	PRE-FINSHED, PROVIDE COLOR-MATCHED CAULK BY JAMES HARDIE
G1	ALUMINUM GUTTERS		.032 POLISHED ALUMINUM W/ CLEAR ANODIZED FINISH	CONTINUOUS - NO SEAMS ALLOWED. SEE SHEET A3.1
ICE	ICE MERCHANDISER	LEER	PAINT BENJAMIN MOORE. BM OC-1 NATURAL WICKER	
LADD	METAL EXTERIOR LADDER	EASTERN METAL SUPPLY	BRUSHED ALUMINUM	SEE A3.1 FOR DETAILS
LGD	6' LADDER GUARD #LG6	VISIONMASTERS EQUIP. CO.	MILL FINISH	
LIGHT	EXTERIOR LIGHT FIXTURE			SEE ELECTRICAL DRAWINGS AND DETAIL 18/A7 FOR MOUNTING
MTPN	METAL PANEL	CFL ARCHITECTURAL, LLC.	COLOR TO MATCH ADJACENT TRIM (A)	BAHAMA SHUTTERS ASSEMBLY. CONTACT (407) 408-3932
MTPN2	METAL PANEL	CFL ARCHITECTURAL, LLC.	PAINT TO MATCH DOORS, EP1 (A)	PANEL ABOVE DOOR. CONTACT (407) 408-3932
OFS	STAINLESS STEEL 8" X 16" OVERFLOW SCUPPER	ATAS INTERNATIONAL INC.	NATURAL MILL FINISH	ALTERNATE: PETERSON PAC CLAD
OVH	METAL OVERHANG FACING	ATAS INTERNATIONAL INC.	RAPID-LOK FASCIA & RAPID-LOK COPING, COLOR: #17 BRITE RED	SEE A3.1 FOR DETAILS. ALTERNATE : PETERSON PAC CLAD
OVH2	HIP ROOF FASCIA	ATAS INTERNATIONAL INC.	BRAKE METAL, COLOR #26 BONE WHITE (A)	SEE A3.1 FOR DETAILS. ALTERNATE : PETERSON PAC CLAD
PAR	ALUMINUM PARAPET CAP	ATAS INTERNATIONAL INC.	COLOR TO MATCH ADJACENT TRIM	ALTERNATE : PETERSEN PAC CLAD
PBS	PREFINISHED ALUMINUM BAHAMA SHUTTER	CFL ARCHITECTURAL, LLC.	COLOR TO MATCH ADJACENT TRIM	SHUTTER PER SPECS. CONTACT (407) 408-3932

ARCHITECTURAL - EXTERIOR FINISH SCHEDULE

SYMBOL	MATERIAL	MANUFACTURER	COLOR (A)	NOTES
PVCT	ACCENT TRIM	AZEK	WHITE. FINISH: SMOOTH; SEE DRAWINGS FOR DIMENSIONS	PRE-FINISHED. ALTERNATE : PALIGHT
RF2	METAL ROOFING	ATAS INTERNATIONAL INC.	MRD194 DUTCH SEAM, (1 1/2") 19.25", COLOR: #23 COPPERTONE	ALTERNATE : PETERSEN PAC CLAD
RF3	STANDING SEAM ROOF HIP CAP	ATAS INTERNATIONAL INC.	TO MATCH METAL ROOFING	ALTERNATE : PETERSEN PAC CLAD
RSUP	ROD SUPPORT & PLATE		POWDER COAT, MATCH SW #6076	SEE STRUCTURAL. ALL RODS NOT INDICATED ON STRUCTURAL ARE PURELY DECORATIVE RE: 21/A3.1
SCJ	STUCCO CONTROL JOINT - 3/4" WIDE			'W' SHAPED ACCORDION STYLE RE SPECS
SIGN	ILLUMINATED SIGNAGE			SIGN BY WAWA, SURFACE MOUNTED
SOFF	MPS120, SOLID AND VENTED	ATAS INTERNATIONAL INC.	BONE WHITE	BUILDING OVERHANGS. ALTERNATE : PETERSEN PAC-CLAD
SPAN	SPANDREL GLASS, 1" INSULATED TEMPERED	VERICON	SUBDUED BRONZE	FRIT TO BE ON INSIDE OF PANEL
STN1	MANUFACTURED STONE VENEER	BORAL	SOUTHWEST BLEND PF-8019, PRO-FIT LEDGESTONE	
STN2	PRE-CAST MANUFACTURED STONE WATERTABLE/SILL	BORAL	TAUPE CSV-1375	VERTICAL GROUT JOINTS: 3/16" MAX. WIDTH. GROUT WITH BONSAL #71 WARM IVORY
STN5	PRE-CAST STONE BASE	ITALIAN CAST STONE	3"W X 6"H X 48" LENGTHS AND 3"W X 8"H X 48" LENGTHS. SEE DRAWINGS FOR LOCATIONS. COLOR: ICS-LS-WAWA-SABIA. FINISH: "LIGHT SMOOTH" ; MAINTAIN CONSISTENT COLOR THROUGHOUT PROJECT	SEE DETAIL 5 & 11/A6.1. ALTERNATE: QUALITY STONE VENEER, INC. SEE SPECIFICATIONS.VERTICAL GROUT JOINTS: 3/16" MAX. WIDTH. GROUT WITH BONSAL #71 WARM IVORY
STN6	PRE-CAST STONE CAP	ITALIAN CAST STONE (A)	COLOR: WHITE	SEE SHEET A10. GROUT JOINTS 3/16" MAX. WIDTH. COLOR: WHITE (TO MATCH STONE CAP)
STOR	STOREFRONT SYSTEM	KAWNEER	CLEAR ANODIZED	SEE SPECIFICATIONS
STU1	STUCCO	SENERGY	#3085 MERINGUE. FINISH: SAHARA	
STU2	STUCCO	SENERGY	#354 STARK WHITE, FINISH: FINE	
TG	1" INSULATED TEMPERED GLASS			SEE SPECIFICATIONS
TGT	1" INSULATED TEMPERED GLASS	VITRO ARCHITECTURE GLASS	GRAYLITE II. SEE SPECS	SEE SPECIFICATIONS
TH	36" X 48" ACCESS HATCH		FACTORY FINISH	REFER TO DOOR SCHEDULE, SHEET A1

Cuhaci & Peterson
Architects Engineers Planners
FL Corporate Certificate #AA C000926
1925 Prospect Avenue Orlando, FL 32814
Ph. 407-661-9100 Fax 407-661-9101 www.c-p.com

CLIENT NAME
WAWA
260 WEST BALTIMORE PIKE
WAWA, PENNSYLVANIA 19063

PROJECT NAME
WAWA F85FB 2018.01 STORE #5275-LIT
9021 STATE ROAD 52
HUDSON, FL 34669

SHEET TITLE
EXTERIOR ELEVATIONS

Revision Schedule

No.	Description	Date
	PERMIT SET	03/21/2017
	PRE-BID REVIEW SET	08/29/2018
A	REV 2018.01	09/18/2018
	BID SET	09/18/2018

PROJECT NO. 2161082
DATE 03-21-2017
DRAWN CP-FL
CHECKED BL

A4

Order Plans @ WWW.LDILine.com