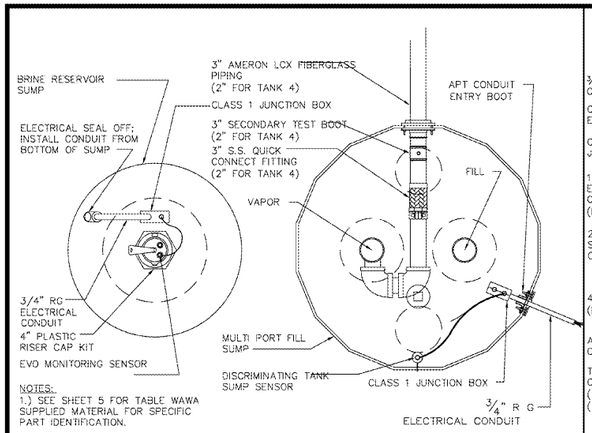

NOTES:
1.) SEE SHEET 5 FOR TABLE WAWA SUPPLIED MATERIAL FOR SPECIFIC PART IDENTIFICATION.

A / G-4 PLAN VIEW – TANKS 1–4
FILL SUMP & BRINE RESERVIOR
SCALE: 1" = 1'-0"

NOTES:
1.) SEE SHEET 5 FOR TABLE WAWA SUPPLIED MATERIAL FOR SPECIFIC PART IDENTIFICATION.
2.) ONLY DUCTING WILL BE ADDED AND NO PRODUCT PIPING INSTALLED UNLESS DIRECTED BY A WAWA PROJECT MANAGER.

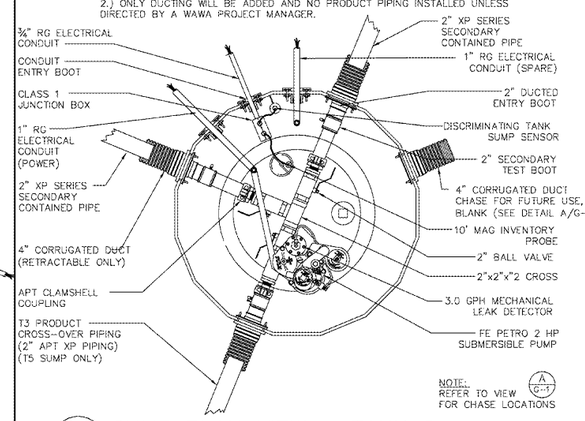

NOTE: REFER TO VIEW A/G-1 FOR CHASE LOCATIONS

E / G-4 SUMP PLAN VIEW – TANK 2
SCALE: 1" = 1'-0"

NOTES:
1.) SEE SHEET 5 FOR TABLE WAWA SUPPLIED MATERIAL FOR SPECIFIC PART IDENTIFICATION.

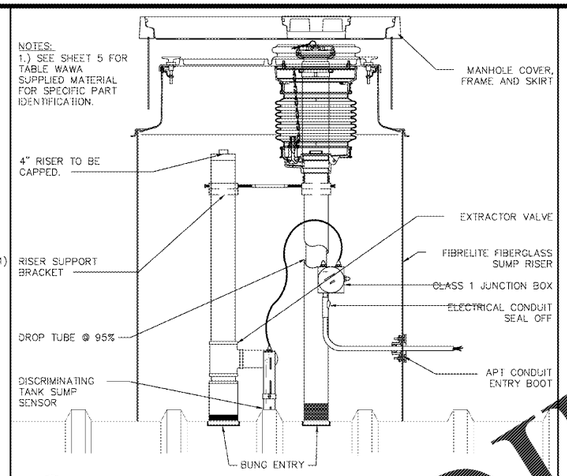

H / G-4 FILL SUMP INSTALL DETAIL – TANK 4
SCALE: 1" = 1'-0"

NOTES:
1.) SEE SHEET 5 FOR TABLE WAWA SUPPLIED MATERIAL FOR SPECIFIC PART IDENTIFICATION.

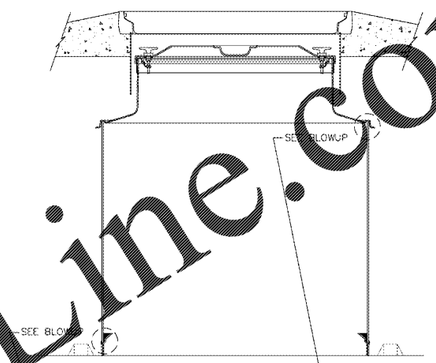

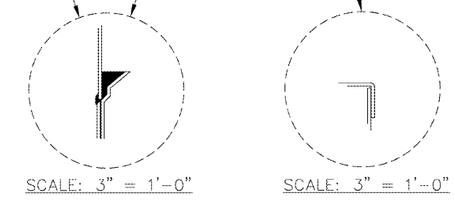

SCALE: 3" = 1'-0" SCALE: 3" = 1'-0"

K / G-4 TURBINE SUMP INSTALL DETAIL
SCALE: 1" = 1'-0"

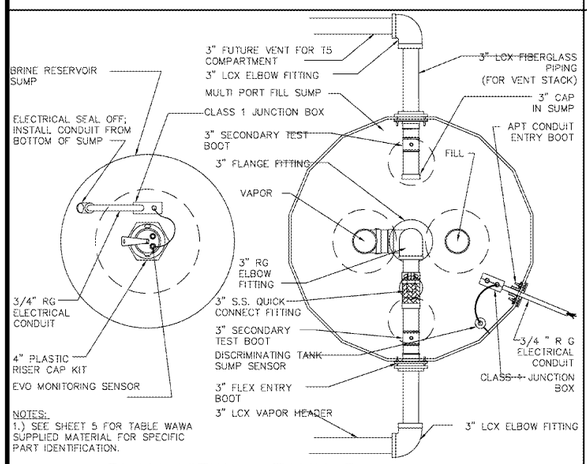

NOTES:
1.) SEE SHEET 5 FOR TABLE WAWA SUPPLIED MATERIAL FOR SPECIFIC PART IDENTIFICATION.

B / G-4 PLAN VIEW – TANK 5
FILL SUMP & BRINE RESERVIOR
SCALE: 1" = 1'-0"

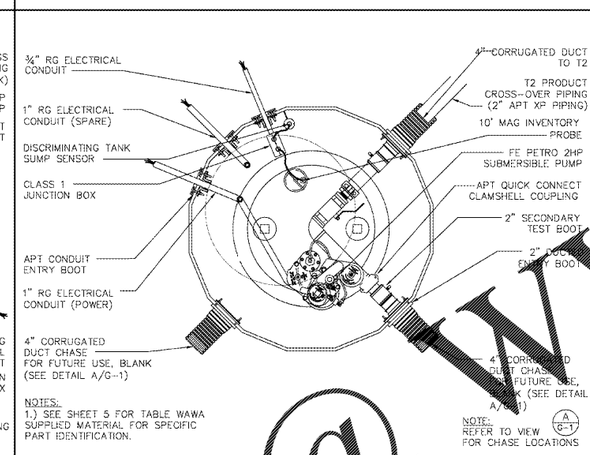

NOTES:
1.) SEE SHEET 5 FOR TABLE WAWA SUPPLIED MATERIAL FOR SPECIFIC PART IDENTIFICATION.

NOTE: REFER TO VIEW A/G-1 FOR CHASE LOCATIONS

F / G-4 SUMP PLAN VIEW – TANK 3
SCALE: 1" = 1'-0"

NOTES:
1.) SEE SHEET 5 FOR TABLE WAWA SUPPLIED MATERIAL FOR SPECIFIC PART IDENTIFICATION.

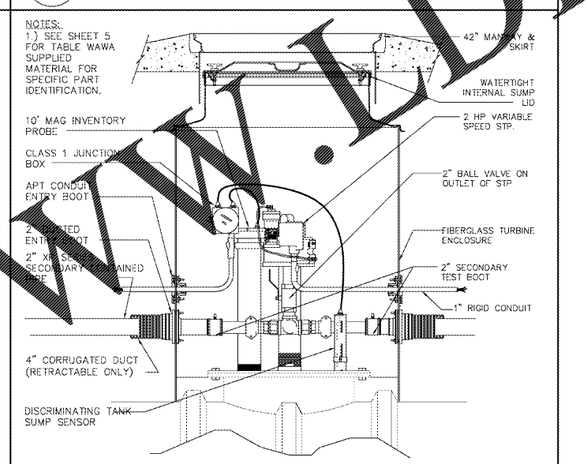

I / G-4 SUMP SECTION – TANK 2
SCALE: 1" = 1'-0"

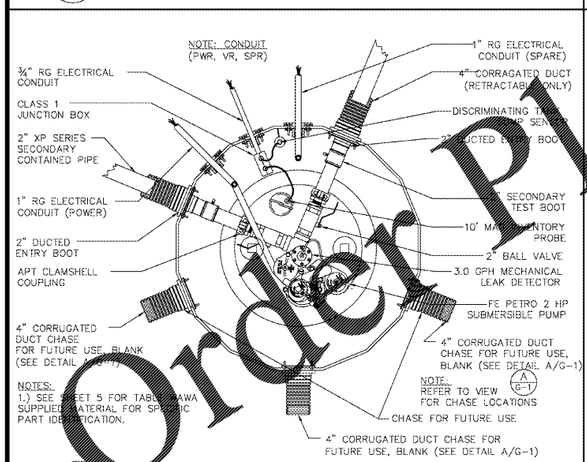

NOTE: REFER TO VIEW A/G-1 FOR CHASE LOCATIONS

NOTES:
1.) SEE SHEET 5 FOR TABLE WAWA SUPPLIED MATERIAL FOR SPECIFIC PART IDENTIFICATION.

D / G-4 SUMP PLAN VIEW – TANKS 1, 4, & 5
SCALE: 1" = 1'-0"

NOTES:
1.) SEE SHEET 5 FOR TABLE WAWA SUPPLIED MATERIAL FOR SPECIFIC PART IDENTIFICATION.

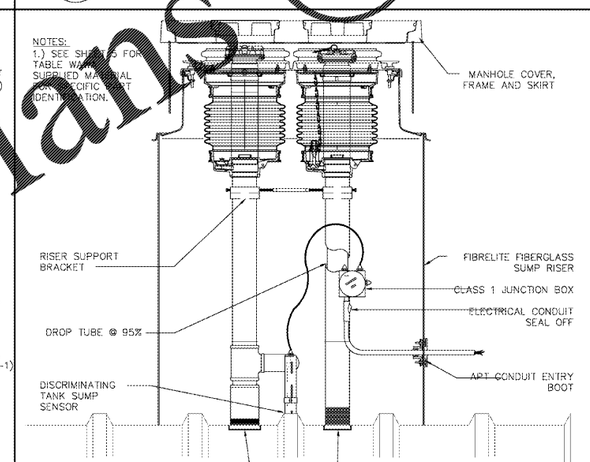

G / G-4 FILL SUMP INSTALL DETAIL – TANK 1,2,3,& 5
SCALE: 1" = 1'-0"

NOTES:
1.) SEE SHEET 5 FOR TABLE WAWA SUPPLIED MATERIAL FOR SPECIFIC PART IDENTIFICATION.

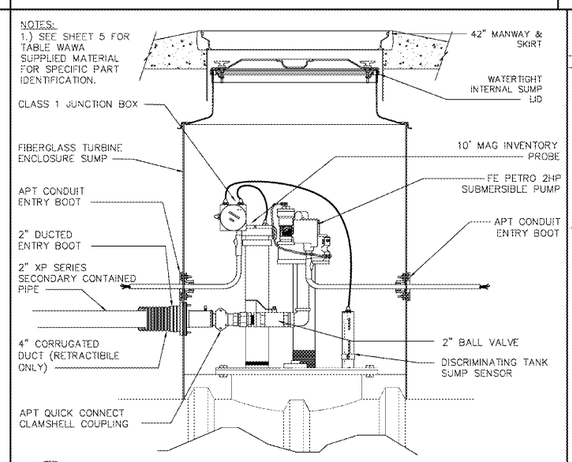

J / G-4 SUMP SECTION – TANK 1,3,4,& 5
SCALE: 1" = 1'-0"

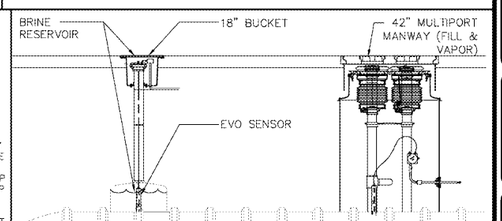

L / G-4 SECTION VIEW – TYPICAL TANKS
FILL SUMP & BRINE RESERVIOR
SCALE: 3/8" = 1'-0"

Order Plans @ WWW.DILine.com

BOHLER ENGINEERING
SITE CIVIL AND CONSULTING ENGINEERS · LANDSCAPE ARCHITECTURE · SURVEYING AND MAPPING · TRANSPORTATION SERVICES · ENVIRONMENTAL · GEOTECHNICAL
LANDTAB SERVICES · SUSTAINABLE DESIGN · PERMITTING SERVICES · CONSTRUCTION SERVICES · VAPOR INTRUSION SERVICES
◆ UPSTATE NEW YORK ◆ BOSTON, MA ◆ NEW YORK, NY ◆ WASHINGTON, DC ◆ NORTHERN NEW JERSEY ◆ SOUTHERN NEW JERSEY ◆ PITTSBURGH, PA ◆ LEHIGH VALLEY, PA ◆ CENTRAL PENNSYLVANIA ◆ DELAWARE ◆ NORTHERN VIRGINIA ◆ CENTRAL VIRGINIA ◆ RICHMOND, VA ◆ WILMINGTON, DE ◆ MARYLAND ◆ WASHINGTON, DC ◆ CHARLOTTE, NC ◆ RALEIGH, NC ◆ ATLANTA, GA ◆ TAMPA, FL ◆ SOUTH FLORIDA ◆ ORLANDO, FL ◆ DALLAS, TX
THE INFORMATION, DESIGNS AND CONTENT OF THIS PLAN ARE PROPRIETARY AND SHALL NOT BE COPIED OR USED FOR ANY PURPOSE NOT SPECIFIC TO THIS PROJECT WITHOUT THE WRITTEN AUTHORIZATION OF BOHLER ENGINEERING. IF THIS PLAN IS RECEIVED ELECTRONICALLY, THE ABOVE RESTRICTIONS APPLY TO ALL DATA CONTAINED IN THE ELECTRONIC FILE.
© 2018 BOHLER ENGINEERING

REVISIONS

REV	DATE	COMMENT	BY

811 KNOW WHAT'S BELOW ALWAYS CALL 811 BEFORE YOU DIG
It's fast. It's free. It's the law.
www.callsunshine.com

PERMIT SET

PROJECT No.:	FLT160078
DRAWN BY:	SKK
CHECKED BY:	JGL
DATE:	10/01/2018
SCALE:	
CAD I.D.:	

PROJECT:
WAWA U.S.T. DRAWINGS
FOR
Wawa
LOCATION OF SITE
9021 STATE ROAD 52
HUDSON, FL 34669
PASCO COUNTY

BOHLER ENGINEERING
3820 NORTHDALE BLVD., SUITE 300B
TAMPA, FLORIDA 33624
Phone: (813) 812-4100
Fax: (813) 812-4101
FLORIDA BUSINESS CERT. OF AUTH. No. 26763
LANDSCAPE ARCHITECT BUSINESS C.O. No. LC26000521

JOHN G. LAPOINTE · LICENSE No. 64211 · STATE OF FLORIDA · PROFESSIONAL ENGINEER · 10/1/2018

SHEET TITLE:
FLORIDA GAS/DIESEL SUMP DETAILS

SHEET NUMBER:
4