OS 0.0.01

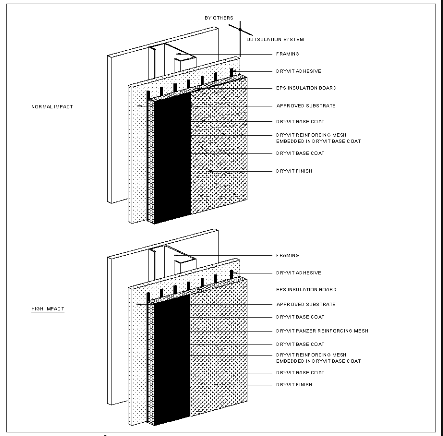

Outsulation® System — Outsulation System

NOTE:
1. DRYVIT RECOMMENDS THAT GROUND FLOOR APPLICATIONS AND ALL FACADES EXPOSED TO ABNORMAL STRESS, HIGH TRAFFIC, OR DELIBERATE IMPACT HAVE THE BASE COAT REINFORCED WITH

OF HIGH IMPACT ZONES SHOULD BE INDICATED ON CONTRACT DRAWINGS.

OS 0.0.02

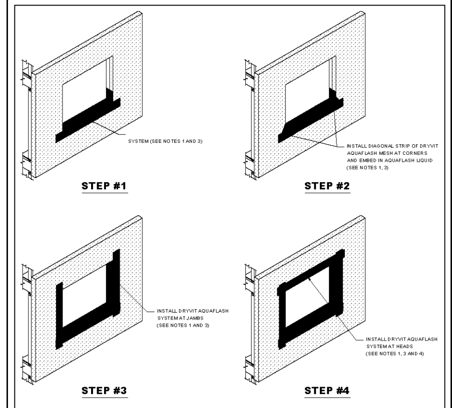

Outsulation® System — Opening Preparation - 5

NOTE:
1. DRYVIT AQUAFLASH SHALL EXTEND TO INTERIOR FACE OF OPENING.
2. REFER TO HEAD, SILL AND JAMB DETAILS FOR FLASHING INTEGRATION.
3. DRYVIT FLASHING TAPE SURFACE

AQUAFLASH SYSTEM.

4. INSTALL WINDOW UNIT AND ASSOCIATED FLASHINGS PER MANUFACTURER'S RECOMMENDATIONS, CODE REQUIREMENTS AND PROJECT DOCUMENTS.
5. AQUAFLASH SYSTEM CONSISTS OF AQUAFLASH MESH AND AQUAFLASH LIQUID.

OS 0.0.03

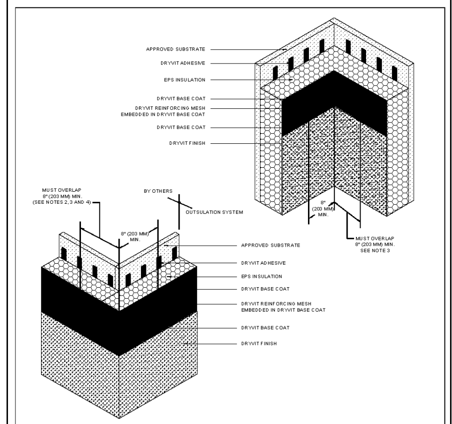

Outsulation® System — Inside/Outside Corners

NOTE:
1. DRYVIT RECOMMENDS THAT GROUND FLOOR APPLICATIONS AND ALL FACADES EXPOSED TO ABNORMAL STRESS, HIGH TRAFFIC, OR DELIBERATE IMPACT HAVE THE

ZONES SHOULD BE INDICATED ON CONTRACT DRAWINGS.
2. DOUBLE WRAP OUTSIDE CORNERS WITH REINFORCING MESH OR USE CORNER MESH.
3. DO NOT LAP REINFORCING MESH WITHIN 8" (203 MM) OF A CORNER.
4. OUTSIDE INSULATION BOARD EDGES SHALL BE OFFSET.

OS 0.0.04

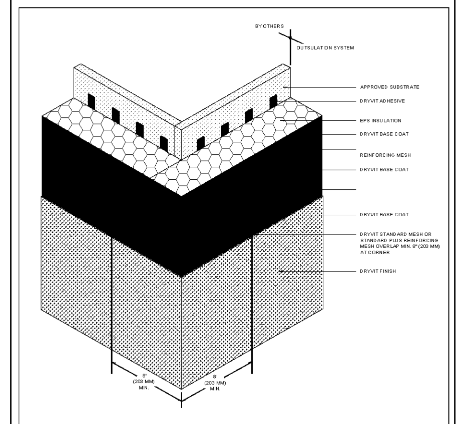

Outsulation® System — Outside Corner - High Impact

NOTE:
1. DRYVIT RECOMMENDS THAT GROUND FLOOR APPLICATIONS AND ALL FACADES EXPOSED TO ABNORMAL STRESS, HIGH TRAFFIC, OR DELIBERATE IMPACT HAVE THE BASE COAT REINFORCED WITH

OF HIGH IMPACT ZONES SHOULD BE INDICATED ON CONTRACT DRAWINGS.
2. OUTSIDE INSULATION BOARD EDGES SHALL BE OFFSET.

OS 0.0.05

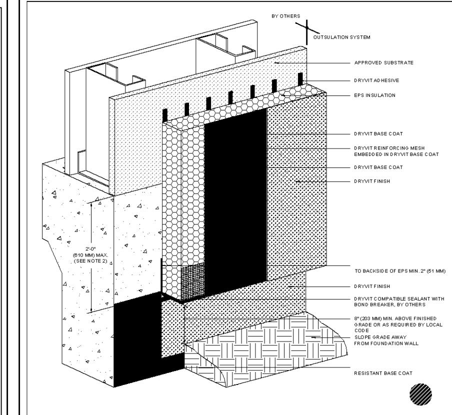

Outsulation® System — Grade Termination

NOTE:
1. DRYVIT RECOMMENDS THAT GROUND FLOOR APPLICATIONS AND ALL FACADES EXPOSED TO ABNORMAL STRESS, HIGH TRAFFIC, OR DELIBERATE IMPACT HAVE THE BASE COAT REINFORCED WITH

OF HIGH IMPACT ZONES SHOULD BE INDICATED ON CONTRACT DRAWINGS.
2. EXPANSION JOINT IS REQUIRED ALONG TOP OF FOUNDATION IF 2'-0" (610 MM) DIMENSION IS EXCEEDED.
3. SLOPE GRADE AWAY FROM WALL.
4. STOP FINISH APPROXIMATELY 2" (51 MM) BELOW GRADE.

OS 0.0.06

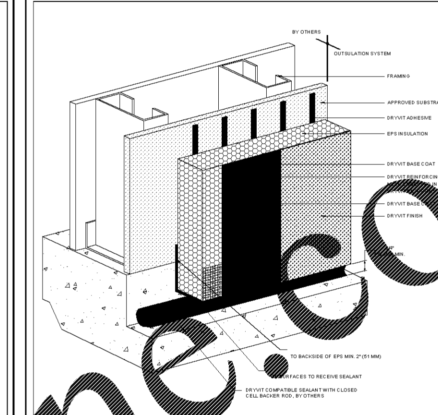

Outsulation® System — Termination At Concrete Curb

NOTE:
1. DRYVIT RECOMMENDS THAT GROUND FLOOR APPLICATIONS AND ALL FACADES EXPOSED TO ABNORMAL STRESS, HIGH TRAFFIC, OR DELIBERATE IMPACT HAVE THE BASE COAT

LOCATION OF HIGH IMPACT ZONES SHOULD BE INDICATED ON CONTRACT DRAWINGS.

OS 0.0.07

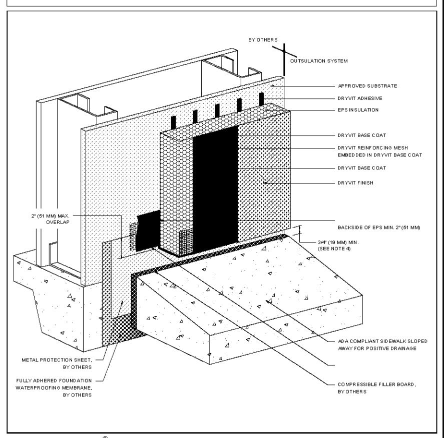

Outsulation® System — Termination At ADA Compliant Sidewalk

NOTE:
1. DRYVIT RECOMMENDS THAT GROUND FLOOR APPLICATIONS AND ALL FACADES EXPOSED TO ABNORMAL STRESS, HIGH TRAFFIC, OR DELIBERATE IMPACT HAVE THE BASE COAT

LOCATION OF HIGH IMPACT ZONES SHOULD BE INDICATED ON CONTRACT DRAWINGS.
2. USE OF THIS DETAIL IS LIMITED TO SLAB-ON-GRADE APPLICATIONS.
3. INCORPORATE MEASURES TO PROTECT STRUCTURE FROM MOISTURE INSTRUSION, DAMPNESS, AND FROST HEAVE.
4. TO PREVENT DEBRIS ACCUMULATION IT IS RECOMMENDED TO TERMINATE SYSTEM 2" (51 MM) ABOVE SIDEWALK.

OS 0.0.08

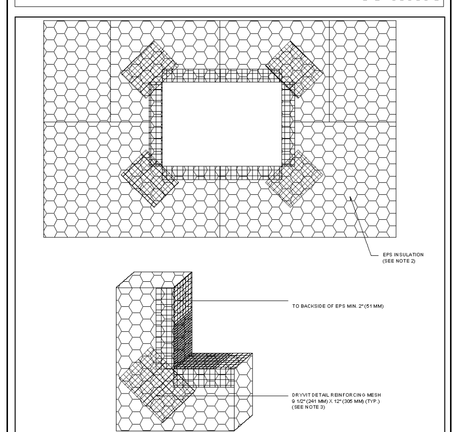

Outsulation® System — EPS Preparation At Wall Penetrations

NOTE:
1. DRYVIT RECOMMENDS THAT GROUND FLOOR APPLICATIONS AND ALL FACADES EXPOSED TO ABNORMAL STRESS, HIGH TRAFFIC, OR DELIBERATE IMPACT HAVE THE BASE COAT REINFORCED WITH

OF HIGH IMPACT ZONES SHOULD BE INDICATED ON CONTRACT DRAWINGS.
2. LOCATE INSULATION BOARDS SUCH THAT BOARD EDGES DO NOT ALIGN WITH CORNERS OF PENETRATION.
3. APPLY A PIECE OF 9 1/2" (241 MM) X 12" (305 MM) DETAIL REINFORCING MESH DIAGONALLY AT EACH CORNER.

OS 0.0.09

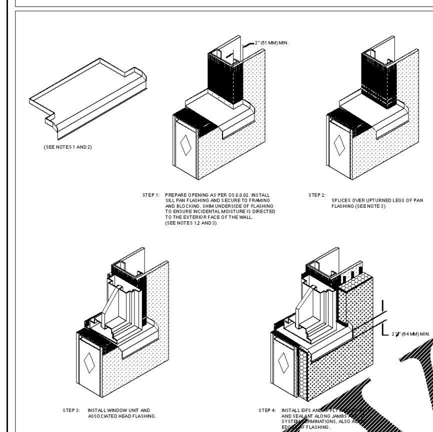

Outsulation® System — Preparation of Opening for Storefront Window

NOTE:
1. PAN FLASHING SHOULD OVERLAP EIFS MIN. 2 1/2" (64 MM) MEASURED FROM THE TOP OF THE EPS.
2. PAN FLASHING MUST HAVE WATERTIGHT SEAMS.
3. DRYVIT FLASHING TAPE SURFACE CONDITIONER™ AND DRYVIT FLASHING TAPE™ MAY BE USED IN LIEU OF AQUAFLASH SYSTEM.

OS 0.0.10

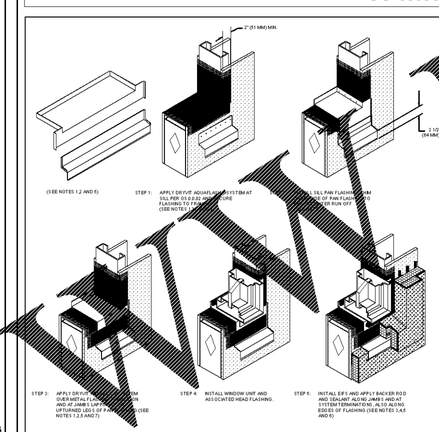

Outsulation® System — Preparation of Opening for Nail-On Window

NOTE:
1. PAN FLASHING SHOULD OVERLAP EIFS MIN. 2 1/2" (64 MM) MEASURED FROM THE TOP OF THE EPS.
2. PAN FLASHING MUST HAVE WATERTIGHT SEAMS.
3. DRYVIT FLASHING TAPE SURFACE CONDITIONER™ AND DRYVIT FLASHING TAPE™ MAY BE USED IN LIEU OF AQUAFLASH SYSTEM.
4. EIFS AT SILL SHALL BE SLOPED FOR DRAINAGE.
5. APPLY DRYVIT AQUAFLASH SYSTEM AT SILL. SEE DETAIL OS 0.0.02
6. ADHESIVE ONLY APPLICATION IS ACCEPTABLE WHEN USING THE AQUAFLASH SYSTEM.
7. DRYVIT FLASHING TAPE SURFACE CONDITIONER AND DRYVIT FLASHING TAPE MAY BE USED IN LIEU OF AQUAFLASH SYSTEM.

OS 0.0.11

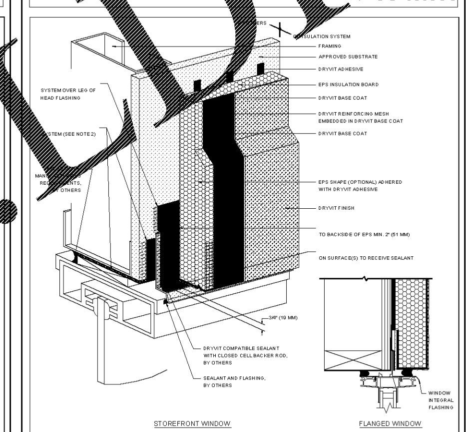

Outsulation® System — Window Head

NOTE:
1. DRYVIT RECOMMENDS THAT GROUND FLOOR APPLICATIONS AND ALL FACADES EXPOSED TO ABNORMAL STRESS, HIGH TRAFFIC, OR DELIBERATE IMPACT HAVE THE BASE COAT REINFORCED WITH

OF HIGH IMPACT ZONES SHOULD BE INDICATED ON CONTRACT DRAWINGS.
2. DRYVIT FLASHING TAPE SURFACE

DRYVIT AQUAFLASH SYSTEM.

OS 0.0.13

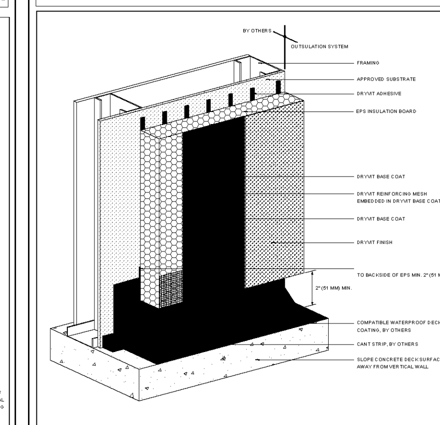

Outsulation® System — Termination at Waterproof Deck

NOTE:
1. DRYVIT RECOMMENDS THAT GROUND FLOOR APPLICATIONS AND ALL FACADES EXPOSED TO ABNORMAL STRESS, HIGH TRAFFIC, OR DELIBERATE IMPACT HAVE THE BASE COAT REINFORCED WITH

OF HIGH IMPACT ZONES SHOULD BE INDICATED ON CONTRACT DRAWINGS.

OS 0.0.14

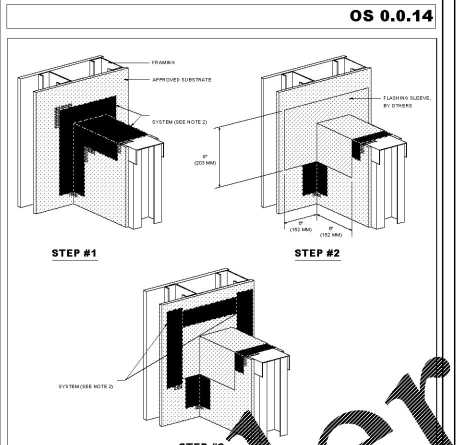

Outsulation® System — Preparation At Parapet/Wall Intersection

NOTE:
1. DRYVIT FLASHING TAPE SURFACE

AQUAFLASH SYSTEM.

OS 0.0.15

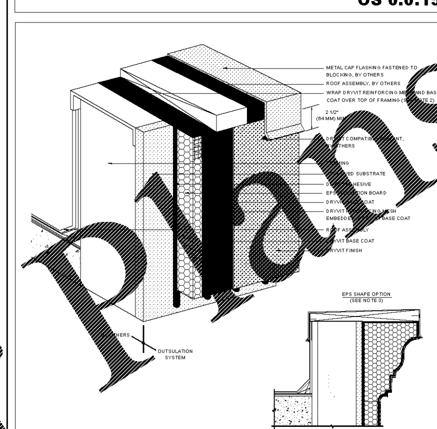

Outsulation® System — Termination At Parapet - Cap Flashing

NOTE:
1. DRYVIT RECOMMENDS THAT GROUND FLOOR APPLICATIONS AND ALL FACADES EXPOSED TO ABNORMAL STRESS, HIGH TRAFFIC, OR DELIBERATE IMPACT HAVE THE BASE COAT

LOCATION OF HIGH IMPACT ZONES SHOULD BE INDICATED ON CONTRACT DRAWINGS.
2. AS AN OPTION, DRYVIT AQUAFLASH SYSTEM OR DRYVIT FLASHING TAPE SURFACE CONDITIONER AND DRYVIT FLASHING TAPE MAY BE USED TO PROVIDE ADDITIONAL PROTECTION AT TOP OF A PARAPET WALL.
3. MAXIMUM THICKNESS OF EPS BUILT OUT SHAPES SHALL NOT EXCEED 13" (330 MM) AT ANY POINT MEASURED FROM THE SUBSTRATE.

OS 0.0.16

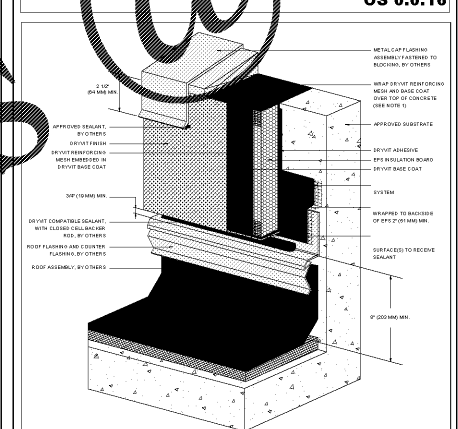

Outsulation® System — Termination At Parapet - Solid Substrate

NOTE:
1. DRYVIT RECOMMENDS THAT GROUND FLOOR APPLICATIONS AND ALL FACADES EXPOSED TO ABNORMAL STRESS, HIGH TRAFFIC, OR DELIBERATE IMPACT HAVE THE BASE COAT

LOCATION OF HIGH IMPACT ZONES SHOULD BE INDICATED ON CONTRACT DRAWINGS.

SYSTEM OR DRYVIT FLASHING TAPE SURFACE

MAY BE USED TO PROVIDE ADDITIONAL PROTECTION AT THE TOP OF A PARAPET WALL.

OS 0.0.17

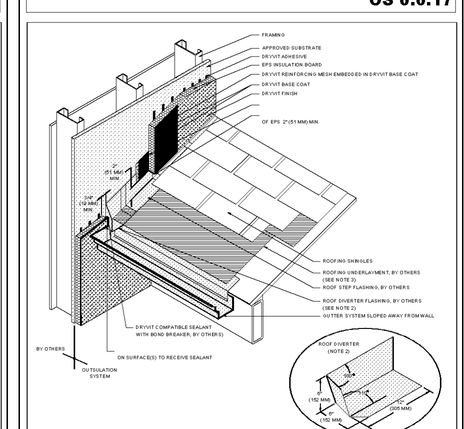

Outsulation® System — Termination at Sloped Roof

NOTE:
1. EXTEND DIVERTER FLASHING (KICKOUT) A MINIMUM OF 1" (25 MM) BEYOND FACE OF THE SYSTEM.
2. ROOF DIVERTER TO BE MADE FROM CORROSION RESISTANT MATERIAL MIN. 24 GAGE WITH WATER TIGHT SEAMS.
3. EXTEND ROOFING UNDERLAYMENT 5" (127 MM) UP VERTICAL WALL BEHIND METAL FLASHING.
4. METAL FLASHINGS ARE 10" (254 MM) X 2" (51 MM) LONGER THAN THE EXPOSED PORTION OF THE ROOFING SHINGLE AND ARE BENT IN HALF TO ALLOW FOR TWO 5" (127 MM) LEGS. ALTHOUGH NOT SHOWN, METAL FLASHINGS ARE STEP FLASHED (INTERWOVEN) WITH ROOFING SHINGLES.
5. FOR ADDITIONAL SLOPED ROOF DETAILS, REFER TO DRYVIT PUBLICATION DS106.

OS 0.0.18

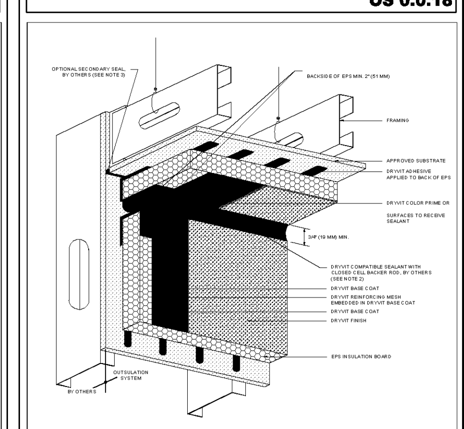

Outsulation® System — Vertical Wall/Suspended Soffit Transition

NOTE:
1. DRYVIT RECOMMENDS THAT GROUND FLOOR APPLICATIONS AND ALL FACADES EXPOSED TO ABNORMAL STRESS, HIGH TRAFFIC, OR DELIBERATE IMPACT HAVE THE BASE COAT

LOCATION OF HIGH IMPACT ZONES SHOULD BE INDICATED ON CONTRACT DRAWINGS.
2. SEALANT JOINT IS REQUIRED FOR SUSPENDED SOFFITS. OPTIONAL FOR RIGIDLY FRAMED.

OS 0.0.19

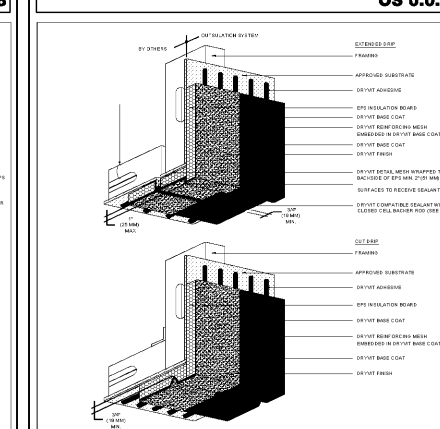

Outsulation® System — Transition At Soffit/Fascia Intersection

NOTE:
1. DRYVIT RECOMMENDS THAT GROUND FLOOR APPLICATIONS AND ALL FACADES EXPOSED TO ABNORMAL STRESS, HIGH TRAFFIC, OR DELIBERATE IMPACT HAVE THE BASE COAT REINFORCED WITH

OF HIGH IMPACT ZONES SHOULD BE INDICATED ON CONTRACT DRAWINGS.
2. EXPANSION JOINT IS REQUIRED FOR SUSPENDED SOFFITS. OPTIONAL FOR RIGIDLY FRAMED.

ROY WILLIAMS ARCHITECT, INC.
ARCHITECTURE * LAND PLANNING * GRAPHICS
2465 US-1, SUITE 84, ST AUGUSTINE, FL, 32086
904 422 -8986 , RWARCHITECTUREGROUP@GMAIL.COM

JOYCE DEVELOPMENT GROUP

BRANAN FIELD WALK
MIDDLEBURG, FLORIDA
MISCELLANEOUS DETAILS

SEAL
Lic#AR0014813

RELEASED FOR BID ____ DATE ____
RELEASED FOR PERMIT ____ DATE ____
RELEASED FOR CONST. ____ DATE ____

No:	DATE:	REVISIONS:

Date: 9/30/2018
Scale: NTS
Drawn:
Checked:
Sheet No:
A-11
— OF —

Order Plans @ WWW.LDILine.com